10

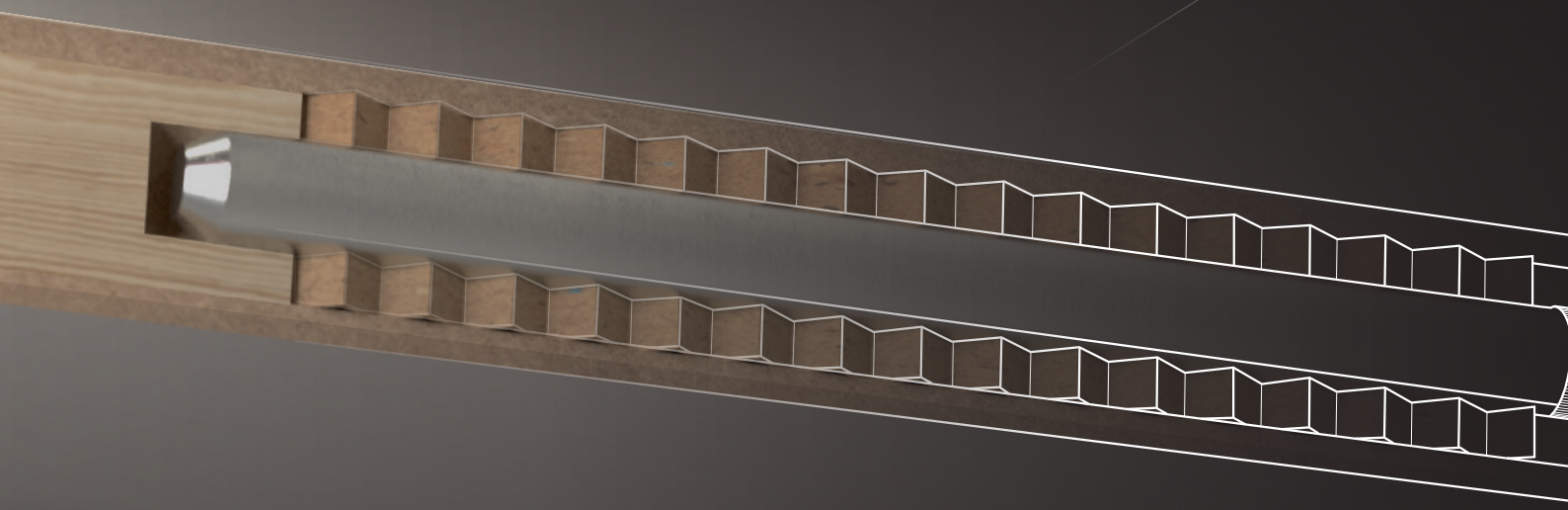

connecting fittings

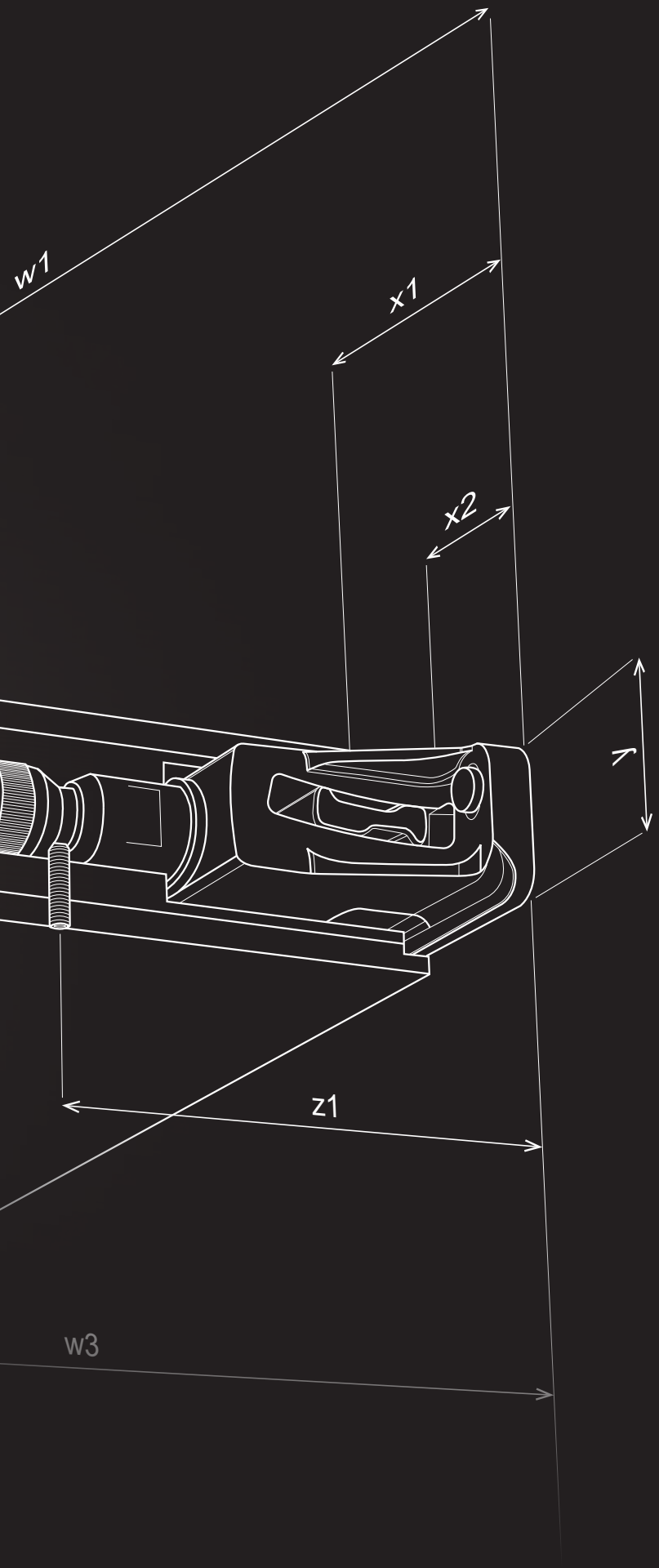

PORTAL

A customer portal for on-line shopping, order overview, placing custom production orders and checking their status, information about stock and your prices and much more in one place.

TECHNICAL SUPPORT

Not sure about the fittings and the choice of assembly? Call +420 596 223 455 or email help@demos-trade.com and we will be happy to help you.

DELIVERY TO YOUR DOOR

All orders will be delivered to your hands the next day.

contents

contents

	Screws	Strong Spax	**p. 10.19 – 10.21** **p. 10.9 – 10.12**
	Eccentric cam fittings	Strong Hettich	**p. 10.43** **p. 10.81 – 10.86**
	Shelf supports	Strong Italiana Ferramenta Hettich	**p. 10.54 – 10.55** **p. 10.50 – 10.51, 10.53, 10.56 – 10.61** **p. 10.89 – 10.90**
	Concealed shelf holders	Italiana Ferramenta	**p. 10.64 – 10.71**
	For worktops		**p. 10.41 – 10.42, 10.87**
	For terraces	Spax	**p. 10.13 -10.17**
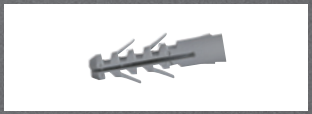	**Wall plugs**		**p. 10.25 – 10.26**
	Screw and confirmat screw cover caps		**p. 10.27 – 10.32**
	Dowels and biscuits	Strong Knapp	**p. 10.34** **p. 10.33, 10.35 – 10.36**
	Cabinet hangers		**p. 10.101 – 10.108**
	For beds		**p. 10.110**
	Connecting and end strips for worktops		**p. 10.115**
	Fittings for toilet cubicles		**p. 10.117**

What is in this chapter?

A brief introduction of manufacturers, products or important values from this chapter.

In the chapter you will find **Strong, Spax, Knapp, Italiana Ferramenta** fittings. They are sorted by product line (screws, fasteners, shelf supports, etc.).

Explanations of some terms

Strong connecting fittings

Fittings you can rely on, combining material and good price with guaranteed quality. From screws to shelf supports to eccentric cam connecting fittings, you'll find it all in the Strong range.

Spax screws

Thanks to the unique 4CUT square cross section, there is no need to pre-drill the part, the use of SPAX screws significantly reduces the possibility of material breakage at the edge and you need much less force to screw it in. The special Wirox surface treatment significantly prolongs corrosion resistance.

Italiana Ferramenta fittings

The stereotype is that Italian things are beautiful, but of low quality. Italiana Ferramenta breaks this stereotype in every way. Their fittings are of the highest quality, they often win various awards for innovative solutions and working with them saves a lot of time and trouble.

Knapp

In just 35 years, the Austrian company KNAPP, a specialist in connecting fittings, especially biscuit connectors, has managed to become one of the industry leaders. One of the advantages of their fittings, for example, is that you don't need any special tools to use their fittings. The high quality of their products is a matter of course.

Hettich eccentric cam fittings

A very popular fitting, especially among serial producers with dismantled furniture. The fittings are renowned, like the entire Hettich brand, for their quality and ease of assembly. The great news for the end user is that the fittings can withstand multiple uses.

Shelf supports

Shelf supports seem to be a simple and uninteresting assortment. The opposite is true, a shelf support can be an interesting and important design and safety feature of furniture. See for yourself the wide range of shelf supports in this chapter. Black options will also be available.

What are the TOP products?

We have prepared a selection of the most interesting things you will find in the catalogue.

Biscuit connectors without the need for tools!

10.33

Sounds good, doesn't it? It's just a bit of an exaggeration, you need a tool to use KNAPP biscuits, but a classic sander or angle grinder will do.

More news in the chapter

Libra H11 hanging of bottom cabinets

An original solution that definitely deserves your attention. Hanging the bottom cabinets is always an interesting challenge. Libra H11 will make it easier.

10.99

connecting fittings

10

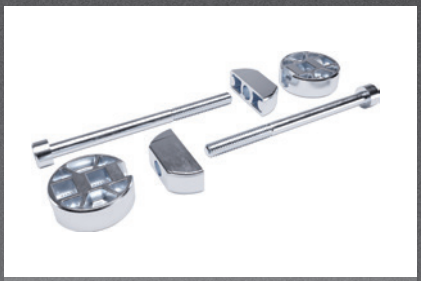

Worktops connecting

The simple fittings for joining the worktops will be welcomed by anyone who is puzzling over how to clamp the compact laminate worktops. Italiana Ferramenta fittings with a drilling depth of 8 mm are the obvious choice.

10,42

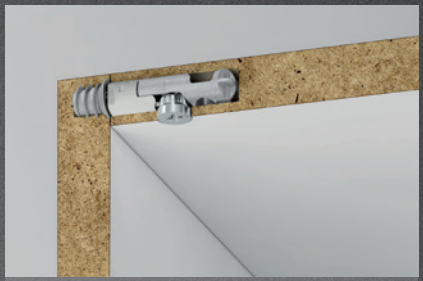

Target is a smart product

Target fittings work in the same way as eccentric cam fittings for joining parts, but unlike them they are virtually invisible in furniture. They are faster to assemble and hold just as tightly.

10.45

The unobtrusive helper

The adjustable cabinet hangers have one flaw. They are quite massive and don't look very good inside the cabinet. This is not the case with Strong fittings, which are discreet and yet do not lose their full functionality.

10.103

Black matt

Black matt what? Black matt profile for joining or finishing the worktop. On dark worktops imitating stone or simply black, it will disappear and not disturb the overall impression of the work done.

10.116

Fittings for cubicles

In this chapter you will also find all the fittings for assembling cubicles made of compact worktops. Legs, connecting elements, profiles, handles, etc...

10.117

Videos and further information on these new products can be found here:

screws for interior

For universal use

- 4CUT point – no pre-drilling needed (most materials[1])
- unique point profile with a square cross section together with a corrugated thread speed up screwing and reduce the force required for screwing
- much lower risk of material cracking at the edge
- all that means faster and better work, longer battery life and lower bit wear
- Multi head ensures milling into board materials with minimal damage to the surroundings, reduces the possibility of spinning the screw when attaching metal objects
- Wirox coating has 20 times higher corrosion resistance compared to conventional screws
- perfectly fitting bits

Special features:

A improved Pozidrive or Torx
B white zinc surface treatment (WIROX) – higher corrosion resistance, no harmful chrome

Advantages:

1 sharp point and square cross section for easy and fast drilling-in
2 corrugated thread – light run due thread directing
3 grooves under the head – they mill the head into the material with minimal damage to the surroundings, they significantly reduce the possibility of spinning the screw when attaching metal objects

perfectly fitting bits

the multi head does not spin

corrugated thread

square cross section

Spax M

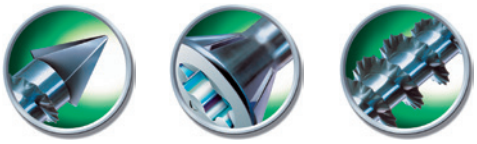

size (d1) (mm)	code	total length (Ls) (mm)	thread length (LgV) (mm)	outer diameter of the head (dk) (mm)	bit
3,5 × 40/28 partial thread	372150	40	28	6	T15
3,5 × 45/30 partial thread	372152	45	30	6	T15
3,5 × 50/35 partial thread	**372153**	50	35	6	T15
4,0 × 40/28 partial thread	372154	40	28	7	T20
4,0 × 45/30 partial thread	372155	45	30	7	T20
4,0 × 50/35 partial thread	**360297**	50	35	7	T20
4,0 × 60/40 partial thread	**360298**	60	40	7	T20
4,5 × 45/30 partial thread	372156	45	30	8	T20
4,5 × 50/35 partial thread	**362693**	50	35	8	T20

- size 4.5 × 50 is ideal for connecting LTD

[1] some materials may require pre-drilling, we recommend testing it

- particularly suitable for MDF boards
- no pre-drilling[1], reducing the risk of material splitting and bulging
- CUT point with a corrugated thread for easy drilling-in
- special narrow head with 75° angle with groove for clean countersinking
- partial thread for tightening the upper part
- Wirox surface treatment has 20 times higher corrosion resistance compared to conventional screws
- the above mentioned advantages combined with T-Star plus drive
- we recommend the use of genuine T-STAR plus bits for perfect performance
- shoulder ensures better centring and transmission of force, prevents slipping at lateral pressure
- working with conventional Torx bits will not allow you to take full advantage of the improved drive
- also used as a substitution for the confirmat screw

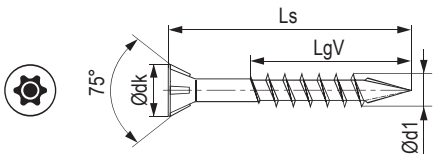

[1] partial thread is particularly suitable for two boards clamping

T-STAR plus

size (d1) (mm)	code	total length (Ls) (mm)	thread length (LgV) (mm)	outer diameter of the head (dk) (mm)
3,0 × 12	387885	12	10	6
3,0 × 16	**367816**	16	14	6
3,0 × 20	**376304**	20	17	6
3,0 × 25	375279	25	21	6
3,0 × 30	**387886**	30	26	6
3,0 × 40/23 partial thread	375280	40	23	6
3,5 × 16	**360288**	16	13	7
3,5 × 20	**360289**	20	16	7
3,5 × 25	367930	25	21	7
3,5 × 30	**360290**	30	25	7
3,5 × 35	372019	35	30	7
3,5 × 35/23 partial thread	**390980**	35	23	7
3,5 × 40	**376065**	40	35	7
3,5 × 40/23 partial thread	473414	40	23	7
3,5 × 50/32 partial thread	**375072**	50	32	7
4,0 × 16	**360291**	16	13	8
4,0 × 20	**360724**	20	16	8
4,0 × 25	**367932**	25	21	8
4,0 × 30	**360292**	30	25	8
4,0 × 30/18 partial thread	**360293**	30	18	8
4,0 × 35	**360725**	35	30	8
4,0 × 35/23 partial thread	**367892**	35	23	8
4,0 × 40	**360726**	40	35	8
4,0 × 40/23 partial thread	377490	40	23	8
4,0 × 45	**360741**	45	40	8
4,0 × 50	**360294**	50	45	8
4,0 × 50/32 partial thread	**377493**	50	32	8
4,0 × 60/35 partial thread	**377494**	60	35	8
4,0 × 70/37 partial thread	**367479**	70	37	8
4,0 × 80/37 partial thread	**377496**	80	37	8
4,5 × 16	376081	16	13	8,8
4,5 × 50/32 partial thread	402499	50	32	8,8
4,5 × 60	372171	60	54	8,8
4,5 × 60/42 partial thread	399711	60	42	8,8
5,0 × 50	**372359**	50	44	9,7
5,0 × 60	**375278**	60	54	9,7
5,0 × 70	**372184**	70	61	9,7
5,0 × 80	**372241**	80	61	9,7
5,0 × 80/46 partial thread	**375205**	80	46	9,7
5,0 × 90/61 partial thread	**375206**	90	61	9,7
5,0 × 100/61 partial thread	**375215**	100	61	9,7
5,0 × 120/69 partial thread	**375223**	120	69	9,7
6,0 × 80	375250	80	61	11,6

- the above mentioned advantages combined with T-Star plus drive
- we recommend the use of genuine T-STAR plus bits for perfect performance
- fitting ensures better centring and power transmission, prevents slipping at side pressure
- working with conventional Torx bits will not allow you to take full advantage of the improved drive

WIROX

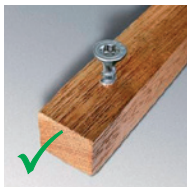

unique Spax screws

common screw

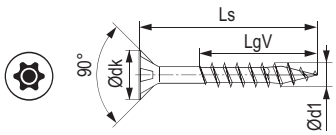

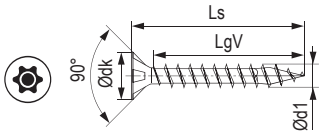

Spax T-STAR plus screws – black zinc

size (d1) (mm)	code	total length (Ls) (mm)	thread length (LgV) (mm)	outer diameter of the head (dk) (mm)
3,5 × 16	**482568**	16	13	7
4,0 × 30	**380449**	30	25	8

screws for interior

Pozidrive

- the above mentioned advantages combined with PZ (Pozidrive) Cam-Out drive
- Wirox coating has 20 times higher corrosion resistance compared to conventional screws
- the advantage of the Cam-Out drive is a deeper design that ensures quality torque transmission even when the bit deflects from the axis (up to 5°)

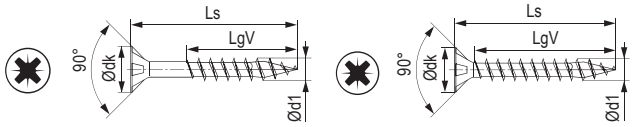

size (d1) (mm)	code	total length (Ls) (mm)	thread length (LgV) (mm)	outer diameter of the head (dk) (mm)	bit
2,5 × 16	367856	16	14	5,1	PZ1
2,5 × 20	385402	20	17	5,1	PZ1
2,5 × 25	464125	25	22	5,1	PZ1
3,0 × 16	**367814**	16	14	6	PZ1
3,5 × 15	379521	15	11	7	PZ2
3,5 × 16	**360281**	16	13	7,5	PZ2
3,5 × 17	**368292**	17	13	7	PZ2
3,5 × 20	**360282**	20	16	7,5	PZ2
3,5 × 30	**360283**	30	25	7,5	PZ2
3,5 × 35	**370005**	35	30	7	PZ2
3,5 × 40	385403	40	35	7	PZ2
3,5 × 50	**369680**	50	40	7	PZ2
4,0 × 16	**360284**	16	13	8	PZ2
4,0 × 17	**383529**	17	13	8	PZ2
4,0 × 20	**360721**	20	16	8	PZ2
4,0 × 30	**360285**	30	25	8	PZ2
4,0 × 30/18 partial thread	**360286**	30	18	8	PZ2
4,0 × 35	**360722**	35	30	8	PZ2
4,0 × 40	**360723**	40	35	8	PZ2
4,0 × 45	**360740**	45	40	8	PZ2
4,0 × 50	**360287**	50	45	8	PZ2
4,0 × 60	**372714**	60	50	8	PZ2
4,0 × 70	372948	70	50	8	PZ2
4,5 × 30	466427	30	25	8,8	PZ2
4,5 × 35	466431	35	30	8,8	PZ2
4,5 × 40	466435	40	34	8,8	PZ2
4,5 × 50	466436	50	44	8,8	PZ2
4,5 × 50/32 partial thread	**407961**	50	32	8,8	PZ2
4,5 × 60	372157	60	54	8,8	PZ2
5,0 × 70	**372176**	70	61	9,7	PZ2
5,0 × 80	372179	80	61	9,7	PZ2

Pozidrive bits can be found in chapter 12

[1] partial thread is particularly suitable for two boards clamping

Screws with a pan head

size (d1) (mm)	code	total length (Ls) (mm)	thread length (LgV) (mm)	outer diameter of the head (dk) (mm)	bit
3,5 × 12	374928	12	7	7	T15
3,5 × 20	372143	20	18	7	PZ2
4,0 × 15	**372025**	15	13	8	T20
4,0 × 16	**360728**	16	15	8	T20
4,0 × 16	**360727**	16	15	8	PZ2
4,5 × 16	**365828**	16	15	8	T20
5,0 × 20	392364	20	17	9,9	T20
5,0 × 20	416494	20	17	9,9	PZ2

- suitable for fastening of slides and other applications where a flat bearing surface is required
- this type does not cause deformation of the base, it allows a possible slight shift, etc.
- available for both designs of drives – PZ2 and T-STAR plus

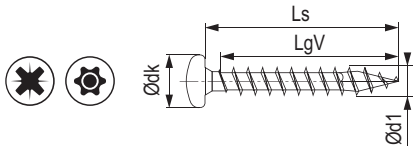

Screw for connecting two boards

size (d1) (mm)	code	total length (Ls) (mm)	thread length (LgV) (mm)	outer diameter of the head (dk) (mm)	bit
4.0 × 33 double thread	**387737**	33	6 + 16	8,0	T20

- screw is ideal for connecting two boards
- perfectly clamps the boards together
- 33 mm length is ideal for connecting boards with a thickness of 18 mm – no risk of unwanted drilling
- 4CUT point – no pre-drilling needed
- corrugated thread – light run due thread directing
- grooves under the head – they mill the head into the material with minimal damage to the surroundings, they significantly reduce the possibility of spinning the screw when attaching metal objects
- Wirox coating has 20 times higher corrosion resistance compared to conventional screws

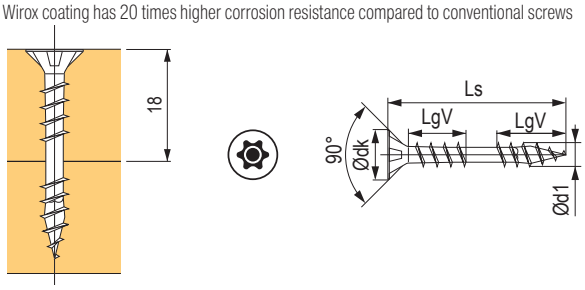

Pozidrive with raised countersunk head

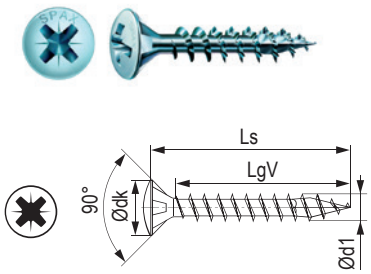

size (d1) (mm)	code	total length (Ls) (mm)	thread length (LgV) (mm)	outer diameter of the head (dk) (mm)	bit
3,5 × 16	**375156**	16	13	7,0	PZ2
3,5 × 20	**375174**	20	16	7,0	PZ2
4,0 × 16	**360299**	16	13	8,0	PZ2
4,0 × 20	**367456**	20	16	8,0	PZ2

Elegant look of the raised countersunk head, nickel surface treatment – fits perfectly with furniture hinges.

- 4CUT point – no pre-drilling needed (most materials[1])
- unique point profile with a square cross section together with a corrugated thread speed up screwing and reduce the force required for screwing
- much lower risk of material cracking at the edge
- Wirox coating has 20 times higher corrosion resistance compared to conventional screws
- all that means faster and better work, longer battery life and lower bit wear
- Multi head ensures milling into board materials with minimal damage to the surroundings, reduces the possibility of spinning the screw when attaching metal objects

Tips for use:
raised countersunk head – perfect hinge appearance, suitable for other products, designed for countersunk head, Spax technology for higher firmness of the joint

Screws with flange head

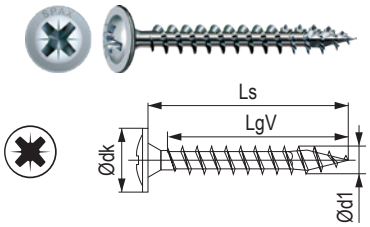

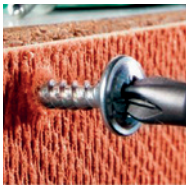

size (d1) (mm)	code	total length (Ls) (mm)	thread length (LgV) (mm)	outer diameter of the head (dk) (mm)	bit
3,5 × 17	**364719**	17	15	8,6	PZ2
3,5 × 20	**364720**	20	18	8,6	PZ2
3,5 × 25	**388123**	25	23	8,6	PZ2
3,5 × 30	**387581**	30	27	8,6	PZ2
3,5 × 35	**382718**	35	32	8,6	PZ2
4,0 × 20	**467071**	20	18	9,6	PZ2

- suitable for fixing the back to the cabinet body
- 4CUT point, no pre-drilling needed
- Wirox coating has 20 times higher corrosion resistance compared to conventional screws
- large bearing surface guarantees high joint strength

Flooring screw, double thread

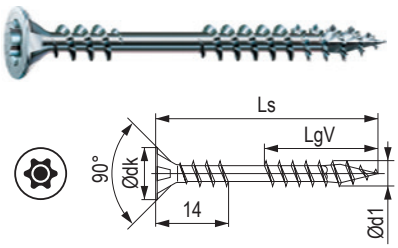

size (d1) (mm)	code	total length (Ls) (mm)	thread length (LgV) (mm)	outer diameter of the head (dk) (mm)	bit
4,5 × 50	**372721**	50	21,5	8,8	T20

- suitable for fixing floors to the substructure
- the second thread ensures a firm clamping of the floor to the substructure (reduces the floor creaking)
- 4CUT point, no pre-drilling needed
- Wirox surface treatment has 20 times higher corrosion resistance compared to conventional screws

Screw for solid wood

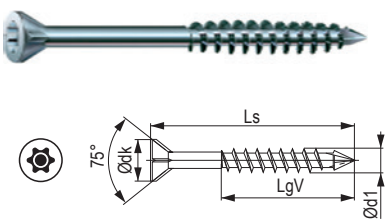

size (d1) (mm)	code	total length (Ls) (mm)	thread length (LgV) (mm)	outer diameter of the head (dk) (mm)	bit
3,5 × 35	**376001**	35	20	6	T10

- suitable for fixing solid wood without the risk of cracking (floorboards, flooring, laths, etc.)
- special narrow head with 60° angle with groove for clean countersinking
- 4CUT point with a corrugated thread for easy drilling-in
- Wirox surface treatment has 20 times higher corrosion resistance compared to conventional screws

screws for exterior

Frame screws with washer head

corrugated thread

square cross section

washer head

size (d1) (mm)	code	total length (Ls) (mm)	thread length (LgV) (mm)	outer diameter of the head (dk) (mm)	bit
6 × 60	**360300**	60	56	13,6	T30
6 × 80	**360301**	80	61	13,6	T30
6 × 100 / 61	**360302**	100	61	13,6	T30
6 × 120 / 68	**360303**	120	68	13,6	T30
6 × 140 / 68	**360304**	140	68	13,6	T30
6 × 160 / 65	**360305**	160	65	13,6	T30
8 × 80	**360306**	80	70	20,0	T40
8 × 100 / 80	**360307**	100	80	20,0	T40
8 × 120 / 80	**360308**	120	80	20,0	T40
8 × 140 / 80	**360309**	140	80	20,0	T40
8 × 160 / 80	**360310**	160	80	20,0	T40
8 × 180 / 80	**360311**	180	80	20,0	T40
8 × 200 / 80	**360312**	200	80	20,0	T40
8 × 220 / 80	**360313**	220	80	20,0	T40
8 × 240 / 80	**360314**	240	80	20,0	T40
8 × 260 / 80	**360315**	260	80	20,0	T40
8 × 280 / 80	**360316**	280	80	20,0	T40

- suitable for wooden constructions, pergolas, fastening of objects, etc.
- washer head – large bearing surface for transmission of great force
- 4CUT point – no pre-drilling needed (most materials[1])
- unique point profile with a square cross section together with a corrugated thread speed up screwing and reduce the force required for screwing
- from the length of 160 mm the milling section Spax 4CUT – noticeably reduces torque during tightening
- much lower risk of material cracking at the edge
- all that means faster and better work, longer battery life and lower bit wear
- Wirox coating has 20 times higher corrosion resistance compared to conventional screws
- perfectly fitting bits

[1] some materials may require pre-drilling, we recommend testing it

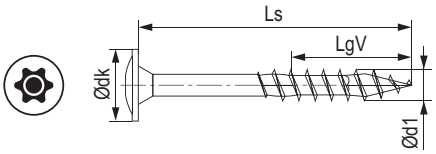

Post screw

size (d1) (mm)	code	total length (Ls) (mm)	thread length (LgV) (mm)	outer diameter of the head (dk) (mm)	bit
8 × 50	**360320**	80	44	14	T40

- designed especially for wooden constructions, anchoring, connecting, etc.
- fillister head – elegant appearance, designed especially for pillars fastening
- 4CUT point – no pre-drilling needed (most materials[1])
- unique tip profile together with a corrugated thread speed up screwing and reduce the force required for screwing
- much lower risk of material cracking at the edge
- all that means faster and better work, longer battery life and lower bit wear
- made of stainless steel A1 for outdoor use

[1] some materials may require pre-drilling, we recommend testing it

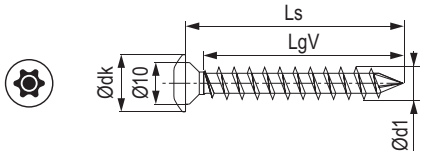

Screws with flat head

WIROX

size (d1) (mm)	code	total length (Ls) (mm)	thread length (LgV) (mm)	outer diameter of the head (dk) (mm)	bit
4 × 30	**405862**	30	16	4,0	T20
4 × 34	**405370**	34	16	4,0	T20

- decorative screw with flat head
- for connecting two boards
- head height only 1 mm and diameter 10 mm
- nickel surface treatment

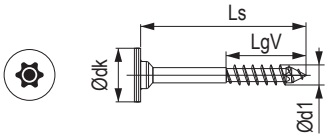

T-STAR plus with countersunk head

size (d1) (mm)	code	total length (Ls) (mm)	thread length (LgV) (mm)	outer diameter of the head (dk) (mm)	bit
6,0 × 50 / 32	**375363**	50	32	11,6	T30
6,0 × 60 / 37	**375364**	60	37	11,6	T30
6,0 × 70 / 41	**375365**	70	41	11,6	T30
6,0 × 80 / 46	**375366**	80	46	11,6	T30
6,0 × 90 / 61	**372242**	90	61	11,6	T30
6,0 × 100 / 61	**372243**	100	61	11,6	T30
6,0 × 120 / 68	**375371**	120	68	11,6	T30
8,0 × 80 / 47	**375372**	80	47	15,1	T40
8,0 × 100 / 57	**375376**	100	57	15,1	T40
8,0 × 120 / 70	**375377**	120	70	15,1	T40
8,0 × 140 / 80	**375378**	140	80	15,1	T40
8,0 × 160 / 80	**375379**	160	80	15,1	T40
8,0 × 180 / 80	**375382**	180	80	15,1	T40
8,0 × 200 / 80	**375383**	200	80	15,1	T40
8,0 × 220 / 80	**375384**	220	80	15,1	T40
8,0 × 240 / 80	**375386**	240	80	15,1	T40
8,0 × 260 / 80	**375387**	260	80	15,1	T40
8,0 × 280 / 80	**375388**	280	80	15,1	T40

- the above mentioned advantages combined with T-Star plus drive
- we recommend the use of genuine T-STAR plus bits for perfect performance
- shoulder ensures better centring and transmission of force, prevents slipping at lateral pressure
- working with conventional Torx bits will not allow you to take full advantage of the improved drive

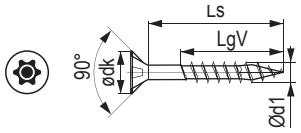

Cylindrical decking TXS screws

size (d1) (mm)	code	colour	total length (Ls) (mm)	thread length (LgV) (mm)	outer diameter of the head (dk) (mm)	bit
5,0 × 40	**375466**	silver	40	21	7	T25
5,0 × 50	**361416**	silver	50	22,5	7	T25
5,0 × 60	**360318**	silver	60	27,5	7	T25
5,0 × 70	**375467**	silver	70	31	7	T25
5,0 × 40	**361415**	antique	40	21	7	T25
5,0 × 50	**360319**	antique	50	22,5	7	T25
5,0 × 60	**361417**	antique	60	27,5	7	T25

- 4CUT point with a corrugated thread for easy drilling-in
- lower risk of material cracking at the edge
- small cylinder head
- faster and better work, longer battery life and lower bit wear
- the double thread prevents loosening during drying
- using visible screws makes it easier to replace a damaged board
- suitable for hardwood terraces
- stainless steel A2
- we recommend pre-drilling, especially when working with hardwood

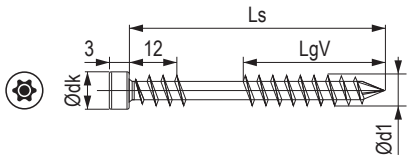

terrace accessories

Decking screw, cylindrical

- 4CUT point with a corrugated thread for easy drilling-in
- lower risk of material cracking at the edge
- small cylinder head
- faster and better work, greater endurance of batteries and lower bit wear
- steel material with Wirox surface treatment
- the double thread prevents loosening during drying
- using visible screws makes it easier to replace a damaged board
- suitable for softwood terraces (Siberian larch, etc.)
- the set includes a two-step drill bit and a T20 bit

size (d1) (mm)	code	total length (Ls) (mm)	thread length (LgV) (mm)	outer diameter of the head (dk) (mm)	bit
4,5 × 60	**361418**	60	27,5	6,0	T20

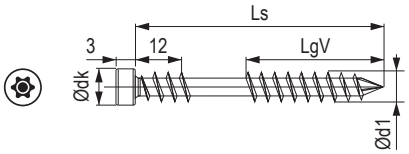

Double drill bit for decking screws 4.1 mm

code	drill bit length (mm)
361432	35

we recommend pre-drilling, especially when working with hardwood and exotic wood

Drill bit for decking screws 5.2 mm

code	drill bit length (mm)
375995	35

- drill bit designed especially for anchoring to aluminium profiles (for special screws)

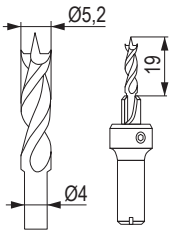

Spax Drive Stop screwing jig

code
360326

Spax Stick Pro

code
376051

- concealed clip mounting type
- suitable for softwood terraces (Siberian larch, etc.)
- one package (120 pcs) is sufficient for about 3 m²

terrace accessories

Spacers

code
361428

- choice of 4, 5, 6 or 7 mm dilatation
- 12 pcs in package

Spax Air spacers

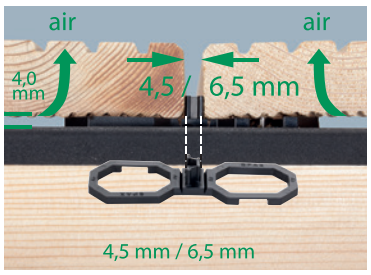

code	dilatation (mm)	number of pcs per package	package per m²
361445	4,5	40	~2,8
360324	4,5	100	~ 7,0
361446	6,5	40	~ 2,8
360325	6,5	100	~ 7,0

- eliminate waterlogging between the board and the substructure
- ensure the spacing between the boards

Spax × PAD plate

code
360323

- rubber 100 × 100 × 8 mm
- 25 pcs in package

Spax Kaiman board straightener with accessories

code
360321

- pulling force up to 600 kg
- set includes: adjustable board straightener, 4× spacer, marking strip

Spax Tape

code	length (m)
360322	30

- rubber tape between the board and the substructure
- 87 mm width

Spax accessories

Spax Lift terrace support

code	designation	height (mm)	number of pcs in package
360328	3 / 5	33–50	3
360329	5 / 9	55–82	3
376224	3 / 5	33–50	50
376233	5 / 9	55–82	50
376234	9 / 13	90–130	50
361441	extension adapter	35	8

- 800 kg load capacity

T-STAR plus bits

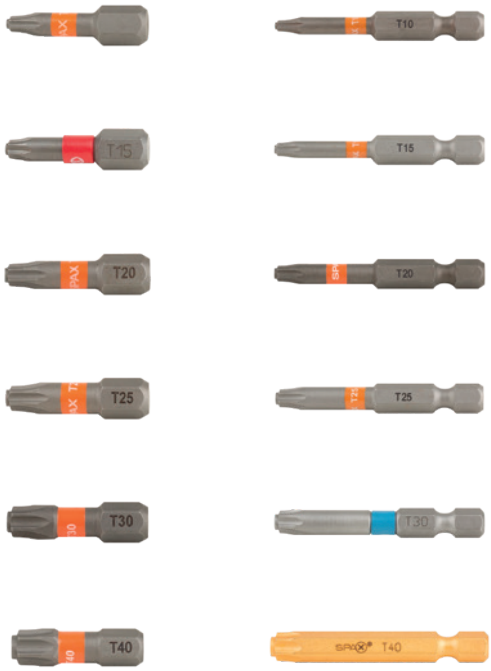

bit	25 mm	50 mm
T10	**375464**	**375460**
T15	**375077**	**372166**
T20	**360295**	**360296**
T25	**375465**	**375461**
T30	**362971**	**375462**
T40	**362972**	**375463**

Bit PZ 25 mm

bit	code
PZ2	**366314**
PZ3	**370003**

BIT check (bit set)

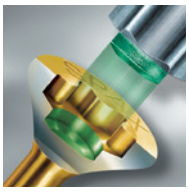

code
360330

- with magnetic holder
- contents: T10, T15, T20, T25, T30, T40

L-BOXX

code
375456

- contains 16 different screw dimensions, 6 bits and adapter
- dimensions: 445 × 360 × 155 mm

L-BOXX mini

code
375455

- contains 6 screw dimensions and 3 bits
- dimensions: 275 × 155 × 65 mm

screws with countersunk head

With hexagon star socket

size (d1) × (L) (mm)	white zinc	bit size
3 × 16	**228954**	T10
3 × 20	**228955**	T10
3 × 25	**228956**	T10
3 × 30	**228957**	T10
3,5 × 16	**228959**	T15
3,5 × 20	**228961**	T15
3,5 × 30	**228963**	T15
3,5 × 35	**228964**	T15
3,5 × 40	**228965**	T15
3,5 × 45	**228966**	T15
3,5 × 50	**228967**	T15
4 × 16	**228968**	T20
4 × 18	**228969**	T20
4 × 20	**228970**	T20
4 × 25	**228971**	T20
4 × 30	**228972**	T20
4 × 35	**228973**	T20
4 × 40	**228974**	T20
4 × 45	**228975**	T20
4 × 50	**228976**	T20
4 × 60	**228977**	T20
4 × 70/42 partial thread	**228978**	T20
4,5 × 20	**228980**	T20
4,5 × 50	**228981**	T20
5 × 40	**228983**	T25
5 × 50	**228984**	T25
5 × 60	**228985**	T25
5 × 70/42 partial thread	**228986**	T25
5 × 80/50 partial thread	**228987**	T25
5 × 100/60 partial thread	**228988**	T25
6 × 80/50 partial thread	**228991**	T30

size (d1) × (L) (mm)	yellow zinc	bit size
3,5 × 18	**470728**	T15

- high-quality countersunk wood screws
- surface treatment: white zinc
- hexagonal drive is capable of transmitting high torque without skipping
- suitable for screwing long screws
- use in hard materials, etc.

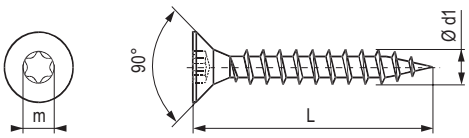

Tightening bits

code	description
265720	bit T10 – 25 mm
265721	bit T15 – 25 mm
265723	bit T20 – 25 mm
265724	bit T25 – 25 mm
265850	bit T30 – 25 mm

other accessories (equipment, bits) can be found in chapter 14

screws with countersunk head

Wood Pozidrive screws

- high-quality screws with cruciform PZ drive, surface treatment – galvanised

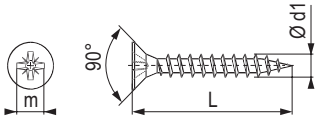

size (d1) × (L) (mm)	yellow zinc	white zinc
2,5 × 10	11338	×
2,5 × 12	11339	×
2,5 × 16	95393	×
2,5 × 20	11378	×
3 × 10	11124	×
3 × 12	11116	×
3 × 16	11146	93225
3 × 20	11102	396177
3 × 25	11148	396178
3 × 30	11115	93201
3 × 35	50147	×
3 × 40	11111	93202
3 × 45	11337	×
3,5 × 12	11101	304752
3,5 × 16	11109	93203
3,5 × 18	132360	228919
3,5 × 20	11150	228920
3,5 × 25	11151	228921
3,5 × 30	11103	228922
3,5 × 33	228942	228923
3,5 × 35	11153	228924
3,5 × 40	11154	228925
3,5 × 45	11155	395074
3,5 × 50	11156	93210
3.5 × 60/36, partial thread	11336	×
4 × 16	11160	93211
4 × 18	11459	228926
4 × 20	11162	228927
4 × 25	11104	93212
4 × 30	11105	93213
4 × 33	228928	228943
4 × 35	11106	228929
4 × 40	11107	228931
4 × 45	11152	228932
4 × 50	11112	93217
4 × 55	93236	×
4 × 60	228944	228933
4 × 60/36, partial thread	11163	93218
4 × 70	228945	×
4 × 70/42, partial thread	11164	×
4 × 80	228946	×
4 × 80/50, partial thread	11131	×
4,5 × 16	11128	×
4,5 × 20	11335	×

size (d1) × (L) (mm)	yellow zinc	white zinc
4,5 × 25	11334	×
4,5 × 30	11119	395075
4,5 × 35	11120	×
4,5 × 40	11114	×
4,5 × 45	11117	×
4,5 × 50	11159	×
4.5 × 60/36, partial thread	11123	×
4,5 × 60	228947	×
4.5 × 70/42, partial thread	11125	×
4,5 × 80	228948	×
4.5 × 80/50, partial thread	11129	×
5 × 20	11158	×
5 × 25	11332	×
5 × 30	11121	×
5 × 35	11126	×
5 × 40	11331	×
5 × 45	11329	×
5 × 50	11130	228934
5 × 55	11328	×
5 × 60	228949	×
5 × 60/36, partial thread	11108	228935
5 × 70/42, partial thread	11113	228936
5 × 80	228950	×
5 × 80/49, partial thread	11122	228937
5 × 90/60, partial thread	95650	×
5 × 100/70, partial thread	11135	×
5 × 120/80, partial thread	11136	×
6 × 25	11310	×
6 × 35	11308	×
6 × 40	11307	×
6 × 50	11305	×
6 × 60	228951	×
6 × 60/36, partial thread	11140	228938
6 × 80	228952	×
6 × 80/50, partial thread	11137	228939
6 × 100/60, partial thread	92789	228940
6 × 120/70, partial thread	92786	228941
6 × 140/70, partial thread	92787	×
6 × 160/70, partial thread	92788	×
6 × 200/70, partial thread	11303	×

size (d1) × (L) (mm)	black zinc
3,5 × 16	309046

screws with countersunk head

Uniquadrex

size (d1) × (L) (mm)	yellow zinc	white zinc	bit size
3 × 12	**92861**	×	0
3 × 16	**92862**	**93039**	0
3 × 20	**92863**	**93043**	0
3 × 30	**92864**	×	0
3 × 40	**92865**	×	0
3,5 × 12	**92866**	×	1
3,5 × 16	**92867**	**103438**	1
3,5 × 20	**92868**	**252872**	1
3,5 × 25	**92869**	×	1
3,5 × 30	**92870**	**229042**	1
3,5 × 35	**92871**	93045	1
3,5 × 40	**92872**	×	1
3,5 × 45	**92873**	×	1
3,5 × 50	**92874**	**157848**	1
4 × 16	**92875**	**134441**	2
4 × 20	**92876**	**229044**	2
4 × 25	**92877**	×	2
4 × 30	**92878**	**157849**	2
4 × 35	**92880**	**396179**	2
4 × 40	**92881**	**396180**	2
4 × 50	**92882**	**157850**	2
4 × 60	**92883**	×	2
4,5 × 40	92884	×	2
4,5 × 45	92885	×	2
4,5 × 60	92886	×	2
4,5 × 70	92890	×	2
5 × 30	92887	×	2
5 × 50	92891	×	2
5 × 60	92888	×	2
5 × 70	92892	×	2
5 × 80	92893	×	2
6 × 60	92889	×	3

- the Uniquadrex system is capable of transmitting a high torque – you can make use of this property when screwing without pre-drilling even into very hard materials
- due to the construction of the Uniquadrex system, skipping of the screwdriver tip in the wood screw drive is limited to a minimum, thereby also limiting damage to the wood screw drive and screw-in tip
- if necessary, the screw can be repeatedly screwed in and out of the wood without problem, thanks to its construction and properties, the Uniquadrex system saves you money on bits – screwing adapters, as these high-quality bits REALLY LAST!

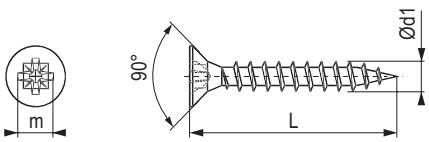

- principle – square conical groove in the screw head and square conical tip of the screwdriver

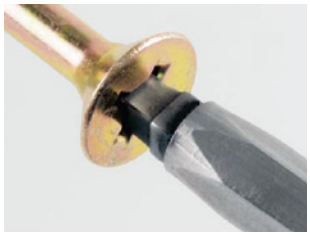

- screw with screwdriver (screwing adapter), self-locking mechanism and reciprocal fixation in one axis

- you can work with ONE HAND and use the other one for example to hold the material

- this is not a photomontage! an example of self-locking mechanism

Tightening bits

size	bit length: 1" (ca. 26 mm)	bit length: 2" (ca. 51 mm)	bit length: 3" (ca. 76 mm)
0	**92894**	**95385**	95664
1	**92895**	**92898**	**92899**
2	**92896**	**95386**	**157851**
3	**92897**	226717	226719

code	description
229040	screwdriver + bits set

- high-quality screwdriver for replaceable bits, the set also includes 4 pcs bits 75 mm (sizes 0, 1, 2, 3)

screws with button head and other screws

With hexagon star socket

size (d1) × (L) (mm)	white zinc	bit size
3,5 × 30	**229006**	T15
4 × 16	**229007**	T20
4 × 30	**229010**	T20
4 × 40	**229011**	T20
4 × 60	**229013**	T20
5 × 30	**229014**	T25
5 × 60	**229017**	T25

- for use with wall plugs, etc.
- surface treatment: white zinc

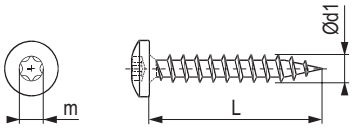

With Uniquadrex drive

size (d1) × (L) (mm)	white zinc	bit size
3 × 16	**368452**	0
3,5 × 16	**229024**	1
3,5 × 30	**229025**	1
4 × 16	**229026**	2
4 × 20	**229027**	2
4 × 30	**229028**	2
5 × 40	**229032**	2
5 × 50	**229033**	2
5 × 60	**229034**	2
5 × 70/42 partial thread	**229035**	2
6 × 60	**229037**	3
6 × 70/42 partial thread	**229038**	3
6 × 80/50 partial thread	**229039**	3

- the same advantages of the drive as for countersunk screws with Uniquadrex drive

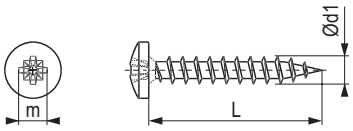

With Pozidrive drive

size (d1) × (L) (mm)	white zinc	bit size
3 × 16	**305319**	PZ1
3,5 × 16	**11143**	PZ2
4 × 16	**228994**	PZ2
4 × 20	**11144**	PZ2
4 × 25	**198430**	PZ2
4 × 30	**228995**	PZ2
4 × 40	**228996**	PZ2
4 × 50	**95677**	PZ2
4 × 60	**95678**	PZ2
5 × 30	**159098**	PZ2
5 × 40	**228997**	PZ2
5 × 50	**228999**	PZ2
5 × 60	**229000**	PZ2
5 × 70/42 partial thread	**229001**	PZ2
5 × 80/50 partial thread	**229002**	PZ2
6 × 70/42 partial thread	**95643**	PZ3
6 × 100/60 partial thread	**100247**	PZ3

- for use with wall plugs, etc.

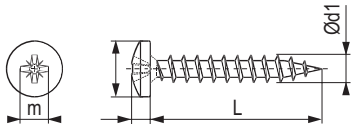

Screws for wood-cement particle boards

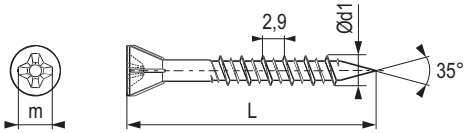

size (d1) × (L) (mm)	white zinc
4,2 × 35 / 25	**393752**
4,2 × 45 / 25	**101538**
4,2 × 55 / 30	**101539**

- with cone head
- hi-low thread, PH drive
- white zinc

Combined screws

size (d1) × (L) (mm)	white zinc
M8 × 80	**101421**
M8 × 120	**276895**

- white zinc

suitable bits can be found in chapter 12

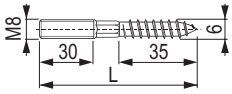

confirmat screws, euro screws, accessories

Confirmat screws

code	size (mm)	colour	package (pcs)
11090	5 / 50	white zinc	200
306119	5 / 50	white zinc	3000
306120	6,4 / 50	white zinc	2000
11099	7 / 50	white zinc	200
306121	7 / 50	white zinc	2000
11098	7 / 50	black	200
11097	7 / 50	yellow zinc	200

for confirmat screw cover caps, see p. 10.32

Confirmat screws – grooves

code	size (mm)	colour
100213	7 / 50	white zinc
100214	7 / 70	white zinc

- grooves in the bottom section of the head limit the possibility of excessive tightening

for confirmat screw cover caps, see p. 10.32

Drill bit for confirmat screws

code	description
353359	6.4/50 + hex key
353358	7/50 + hex key

Hex key

code	description
95394	L 4

- suitable for self-closing mechanism of confirmat screws

Euro screw – countersunk head

code	size	colour	bit size
95399	6,3 × 10 / 8	white zinc	PZ2
95390	6,3 × 13 / 7	white zinc	PZ2
100215	6,3 × 13 / 8	white zinc	PZ2
389914	6,3 × 13 / 7	white zinc	T20
389921	6,3 × 13 / 8	white zinc	T20

Euro screw – pan head

code	size	colour
103550	6,3 × 13 / 9	white zinc

Flat

code	size	for material thickness
283324	4 × 31/20, partial thread	18 – 20 mm
392234	4 × 27/16, partial thread	15 – 16 mm

- decorative screw with elegant flat head
- for connecting two boards
- head height of only 1.2 mm, diameter: 10 mm
- nickel surface treatment

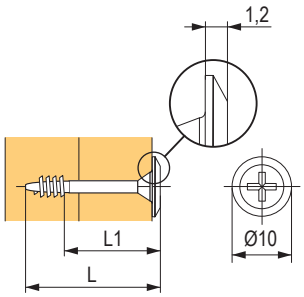

connecting bolts

Flat

code	surface treatment	extent of connection (mm)	hole diameter (mm)
507029	nickel	30–40	5
507030	black nickel		

- M4 thread
- decorative bolt with elegant flat head
- for connecting two boards
- head height of only 1.2 mm
- head diameter 10 mm

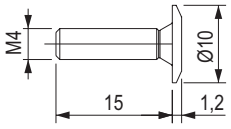

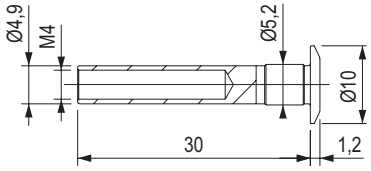

Bolt + nut

code	thread	extent of connection (mm)	hole diameter (mm)
15036	M4	30–40	5
15038	M6	30–40	8

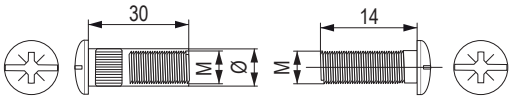

Connecting bolts

code	thread	length L (mm)	hole diameter (mm)
92773	M6	14	8
15039	M6	30	8

- with the help of connecting bolts and nut, a joint range of 30–40 mm (with 14 mm bolt) and 40–50 mm (with 30 mm bolt) can be created

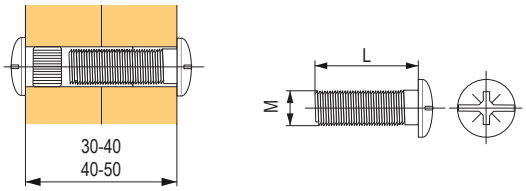

Connecting nuts

code	thread	length L (mm)	hole diameter (mm)
92772	M6	30	8

bolts for handles

Snap-off bolts for handles

code	size
93299	M4 × 50

- bolts for handle fixing, cruciform drive
- surface treatment – white zinc
- can be cut every ca. 5 mm to the length of 25 mm

Bolts for handles

code	size
10144	M4 × 8
15074	M4 × 10
10142	M4 × 12
15076	M4 × 16
10158	M4 × 20
10145	M4 × 22
10155	M4 × 25
10153	M4 × 30
15077	M4 × 35
10154	M4 × 40
95318	M4 × 45

- bolts for handles fixing, cruciform groove
- surface treatment – white zinc

Rubber handle pad

code	description
08002	transparent

- for proper operation, use 2 pcs of plates per one bolt
- for mounting handles on glass panels
- metal must not lie directly on glass
- for bolt diameter 4 mm

wall plugs

Spax

code	size (mm)	package (pcs)	recommended screw size
405546	5 × 25	150	4
405553	6 × 30	80	5
405569	6 × 45	50	5
405592	8 × 40	100	6

- universal wall plug for solid materials
- the degree of tensile load depends on the type of drilled material, detailed information can be found on our portal

Universal

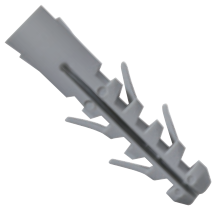

code	size (mm)	package (pcs)	recommended tensile load (kN)[1]	recommended screw size
92700	6 × 30	100	0,42	3,5–5
92701	8 × 40	100	0,6	4,5–6
92702	10 × 60	50	0,74	6–8
92703	12 × 60	25	1,05	8–10

- universal wall plug for solid materials

Knotting wall plug with a rim

code	size (mm)	package (pcs)	recommended tensile load (kN)[1]	recommended screw size
15067	6 × 38	100	0,35	4
15065	8 × 51	50	0,48	5
15066	10 × 61	50	0,6	6

- universal wall plug for hollow and solid materials

TX

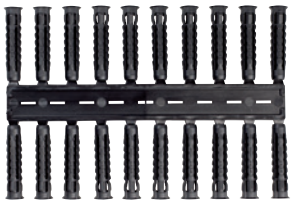

code	size (mm)	package (pcs)	recommended tensile load (kN)[1]	recommended screw size
229048	6 × 30	20	0,49	4–5
229049	8 × 40	20	0,77	4,5–6
229050	10 × 50	10	1,05	6–8

- universal wall plug for solid and hollow materials
- it knots in hollow materials and expands in solid materials
- high resistance against stripping

wall plugs

Turbo AL

			recommended tensile load (kN)[1]		
code	size (mm)	package (pcs)	plasterboard	autoclaved aerated concrete	particle board
229045	10 × 35	100	0,1	0,3	0,25

- special metal wall plug for use to plasterboard, autoclaved aerated concrete and particle board
- cuts into the material without pre-drilling (it is better to pre-drill a 6 mm hole in particle board)
- recommended screw for fastening: 4–4.5 mm (common particle board screw)

Turbo

code	size (mm)	package (pcs)	recommended tensile load (kN)[1]	recommended screw size
229046	10 × 35	100	0,35	4

- special wall plug for use in plasterboard
- it cuts into plasterboard without any pre-drilling
- recommended screw for fastening: 3.5–4 mm

GBH

			recommended tensile load (kN)[1]		
code	size (mm)	package (pcs)	autoclaved aerated concrete G2	autoclaved aerated concrete G4	recommended screw size
229047	10 × 55	50	0,31	0,82	3,5–4

- special wall plug for use in autoclaved aerated concrete, plaster boards and similar lightweight materials
- minimum risk of stripping
- high load capacity

Recommendation:
For assembly, it is advantageous to use screws with button head. The flat bearing surface allows easier adjustment, possible shift, etc. During tightening, the cone shape of the countersunk head does not enable the shift of the object that is being attached. The advantage of the button head is also smaller distortion and better pressure distribution. For screws with button head, see p. 10.21.

[1] stated recommended load applies to static force effect

cover caps

Self-adhesive cover caps

- simple solution for covering the heads of screws, confirmat screws and other holes
- self-adhesive – high adhesion
- for reliable function, it is necessary to carefully clean the site of application
- ABS material, UV resistant (high fade and colour change resistance)
- height: 0.45 mm

Uni colours

sample colours	diameter 13 mm	diameter 20 mm
	298454	298507
	283190	283232
	283283	283300
	283280	283297
	298452	298505
	283273	283290
	298445	298498
	283227	283268
	283217	283259
	283218	283260
	298446	298499
	298447	298500
	283219	283261
	283220	283262
	298448	298501
	298449	298502
	283225	283266
	283226	283267
	298450	298503
	283287	283304
	298451	298504
	283230	283270

sample colours	diameter 13 mm	diameter 20 mm
	283281	283298
	298458	298511
	283222	283263
	298455	298508
	283277	283294
	283231	283271
	298453	298506
	304818	304831
	298459	298512
	298460	298513
	298456	298509
	298461	298514
	298457	298510
	304823	304835
	304819	304832
	304825	304837
	283223	283264
	298462	298515
	304814	304827
	304825	304837
	283223	283264
	304814	304827

sample colours	diameter 13 mm	diameter 20 mm
	304824	304836
	304822	304834
	304815	304828
	304816	304829
	304817	304830
	298447	298500
	283220	283262
	283226	283267
	283230	283270
	283277	283294
	298489	298543
	298493	298547
	283225	283266
	304816	304829
	505514	507396
	505515	507399

colour number	diameter: 40 mm
11164	283272

cover caps

Wood decors

sample colours	diameter 13 mm	diameter 20 mm
	283191	283233
	283288	283305
	283216	283258
	298467	298520
	283286	283303
	283205	283247
	283192	283234
	283279	283296
	283201	283243
	298480	298534
	298486	298540
	298492	298546
	298496	298550
	283284	283301
	283212	283254
	283276	283293
	298468	298521
	298469	298522
	283208	283250
	283274	283291
	283198	283240
	283202	283244
	298481	298535
	298487	298541
	298493	298547
	298497	298551
	283195	283237
	283213	283255

sample colours	diameter 13 mm	diameter 20 mm
	283282	283299
	283193	283235
	298470	298523
	298472	298526
	298476	298530
	283199	283241
	283204	283246
	298482	298536
	298488	298542
	298494	298548
	298463	298516
	298464	298517
	283211	283253
	283209	283251
	283210	283252
	298473	298527
	283194	283236
	283200	283242
	298479	298533
	298483	298537
	298489	298543
	298490	298544
	283289	283306
	283275	283292
	283214	283256
	283215	283257
	283285	283302
	298471	298525

sample colours	diameter 13 mm	diameter 20 mm
	298474	298528
	283278	283295
	298477	298531
	283206	283248
	298484	298538
	298495	298549
	283196	283238
	298465	298518
	298466	298519
	283229	283269
	283203	283245
	298475	298529
	283197	283239
	298478	298532
	283207	283249
	298485	298539
	298491	298545
	283224	283265
	304821	304833
	283211	283253
	298495	298549
	283205	283247
	283281	283298
	283207	283249
	298483	298537
	298495	298549
	283200	283242
	298471	298525

sample colours	diameter 13 mm	diameter 20 mm
	298486	298540
	283211	283253
	283215	283257
	283216	283258
	298486	298540
	298495	298549
	298479	298533
	283210	283252
	298497	298551
	298481	298535
	283197	283239
	283215	283257
	298495	298549
	298495	298549
	298497	298551
	283207	283249
	283197	283239
	298482	298536
	283211	283253
	298482	298536
	283204	283246
	298482	298536
	298473	298527
	505516	507403
	505517	507405

self-adhesive cover caps

Matching to Egger decors

decor Egger	structure	diameter: 13 mm	diameter: 20 mm
W1000	PM	**283218**	**283260**
W1000	ST2	**283227**	**283268**
W1000	ST9	**283227**	**283268**
W1000	ST19	**283217**	**283259**
W1000	ST38	**283217**	**283259**
W1100	PM	**298446**	**298499**
W1100	ST2	**298447**	**298500**
W1100[2)]	ST30	**298446**	**298499**
W1100	ST9	**283217**	**283259**
W1100	ST9	**283227**	**283268**
W908	ST2	**283227**	**283268**
W908	SM	**283227**	**283268**
W980	ST2	**283273**	**283290**
W980	SM	**283273**	**283290**
U104	ST9	**283220**	**283262**
U108	ST9	**283220**	**283262**
U113	ST9	**283219**	**283261**
U114	ST9	**283222**	**283263**
U156	ST9	**283219**	**283261**
U201	ST9	**283225**	**283266**
U201	ST19	**304825**	**304837**
U216	ST9	**298447**	**298500**
U222	PM	**283220**	**283262**
U222	ST2	**283220**	**283262**
U222	ST9	**283220**	**283262**
U321	ST9	**283223**	**283264**
U337	ST9	**298460**	**298513**
U630	ST9	**283231**	**283271**
U702	PM	**298449**	**298502**
U702	ST2	**304823**	**304835**
U702	ST9	**304823**	**304835**
U702[2)]	ST16	**304823**	**304835**
U707	ST9	**304816**	**304829**
U708	PM	**283226**	**283267**
U708	ST2	**283226**	**283267**
U708	ST9	**283225**	**283266**
U727	PM	**304825**	**304837**
U727	ST2	**304825**	**304837**
U727	ST9	**304825**	**304837**
U732	PM	**283287**	**283304**

decor Egger	structure	diameter: 13 mm	diameter: 20 mm
U732	ST2	**283287**	**283304**
U732	ST9	**283287**	**283304**
U741	ST9	**304819**	**304832**
U748	ST9	**304819**	**304832**
U750	ST9	**304823**	**304835**
U763	ST9	**283225**	**283266**
U767	ST9	**304824**	**304836**
U775	ST9	**283226**	**283267**
U788	ST9	**283225**	**283266**
U788[2)]	ST16	**283225**	**283266**
U899	ST9	**283230**	**283270**
U960	ST9	**283287**	**283304**
U960	ST9	**505515**	**507399**
U961	ST2	**304815**	**304828**
U961	ST19	**304815**	**304828**
U960	ST2	**505514**	**507396**
U963	ST9	**304815**	**304828**
U999	PM	**283277**	**283294**
U999	ST2	**283277**	**283294**
U999	ST19	**283230**	**283270**
F416	ST10	**298489**	**298543**
F433	ST10	**298493**	**298547**
F501	ST2	**283190**	**283232**
F502	ST2	**283281**	**283298**
F509	ST2	**283225**	**283266**
F812	ST9	**304816**	**304829**
H1101[2)]	ST12	**298474**	**298528**
H1113	ST10	**283211**	**283253**
H1115	ST10	**283208**	**283250**
H1115	ST12	**298475**	**298529**
H1116[2)]	ST12	**283229**	**283269**
H1122	ST22	**298478**	**298532**
H1123	ST22	**298495**	**298549**
H1137	ST12	**283224**	**283265**
H1145	ST10	**283207**	**283249**
H1146	ST10	**283208**	**283250**
H1151	ST10	**283205**	**283247**
H1176	ST37	**283281**	**283298**
H1180	ST37	**283207**	**283249**
H1181	ST33	**283208**	**283250**

decor Egger	structure	diameter: 13 mm	diameter: 20 mm
H1181	ST37	**298483**	**298537**
H1199	ST12	**283224**	**283265**
H1212[2)]	ST33	**283208**	**283250**
H1213[2)]	ST33	**298471**	**298525**
H1250	ST36	**283206**	**283248**
H1251	ST19	**283216**	**283258**
H1253	ST19	**298495**	**298549**
H1253	ST19	**505517**	**507405**
H1277	ST9	**283200**	**283242**
H1312	ST10	**298471**	**298525**
H1313	ST10	**298486**	**298540**
H1318	ST10	**283211**	**283253**
H1330	ST10	**283215**	**283257**
H1334	ST9	**283200**	**283242**
H1344	ST32	**283216**	**283258**
H1345	ST32	**298486**	**298540**
H1346	ST32	**298495**	**298549**
H1387	ST10	**298479**	**298533**
H1399	ST10	**298481**	**298535**
H1400[2)]	ST36	**283197**	**283239**
H1401	ST22	**298477**	**298531**
H1424	ST22	**283206**	**283248**
H1444	ST9	**283275**	**283292**
H1486	ST36	**298475**	**298529**
H1487	ST22	**283199**	**283241**
H1444[2)]	ST9	**283275**	**283292**
H1511	ST15	**283192**	**283234**
H1582	ST15	**283276**	**283293**
H1615	ST9	**283216**	**283258**
H1636	ST12	**283212**	**283254**
H1714	ST19	**505516**	**507403**
H1733	ST9	**283191**	**283233**
H2033	ST10	**283210**	**283252**

self-adhesive cover caps

Matching to Egger decors

decor Egger	structure	diameter: 13 mm	diameter: 20 mm
H3006[2)]	ST22	**283279**	**283296**
H3012	ST22	**283200**	**283242**
H3048[2)]	ST10	**298482**	**298536**
H3058	ST22	**298497**	**298551**
H3080[2)]	ST15	**283193**	**283235**
H3090	ST22	**298487**	**298541**
H3113[2)]	ST15	**283213**	**283255**
H3131	ST12	**298483**	**298537**
H3133	ST12	**298475**	**298529**
H3146	ST19	**298481**	**298535**
H3154	ST36	**283197**	**283239**
H3156	ST12	**283208**	**283250**
H3157	ST12	**283200**	**283242**
H3170	ST12	**283207**	**283249**
H3176	ST37	**283215**	**283257**
H3178	ST37	**298495**	**298549**
H3190	ST19	**298495**	**298549**
H3192	ST19	**298497**	**298551**
H3303	ST10	**283202**	**283244**
H3309	ST28	**283207**	**283249**
H3325	ST28	**283197**	**283239**
H3326	ST28	**298482**	**298536**
H3330	ST36	**283211**	**283253**
H3331	ST10	**283207**	**283249**
H3395	ST12	**283202**	**283244**
H3398	ST12	**283199**	**283241**
H3408	ST38	**298482**	**298536**
H3430	ST22	**298473**	**298527**
H3433	ST22	**283206**	**283248**
H3450	ST22	**298473**	**298527**
H3451	ST22	**283200**	**283242**
H3453	ST22	**298495**	**298549**
H3453	ST22	**505517**	**507405**
H3700	ST10	**283207**	**283249**
H3702	ST10	**283204**	**283246**
H3710	ST12	**298482**	**298536**
H3710	ST12	**505516**	**507403**
H3730	ST10	**283211**	**283253**
H3732[2)]	ST10	**298474**	**298528**
H3734	ST9	**283210**	**283252**
H3734	ST9	**505516**	**507403**
H3840	ST9	**283282**	**283299**
H3860	ST9	**298473**	**298527**

[2)]decor on sale

Matching to Kronospan decors

decor Kronospan	diameter: 13 mm	diameter: 20 mm
101	**283273**	**283290**
110	**283218**	**283260**
112	**283225**	**283266**
134	**283222**	**283263**
162	**505515**	**507399**
164	**505514**	**507396**
190	**283277**	**283294**
190	**283277**	**283294**
190	**283230**	**283270**
191	**304816**	**304829**
197	**283281**	**283232**
375	**283275**	**283292**
381	**283194**	**283236**
514	**283220**	**283262**
514	**283219**	**283261**
515	**283219**	**283261**
522	**283219**	**283261**
540	**283225**	**283266**
729	**283197**	**283239**
854	**283204**	**283246**
859	**283281**	**283298**
861	**283225**	**283266**
1700	**283225**	**283266**
1715	**283282**	**283299**
1912	**283284**	**283301**
3025	**298483**	**298537**
4299	**304819**	**304832**
5194	**298475**	**298529**
5501	**283216**	**283258**
5527	**283216**	**283258**
5529	**298471**	**298525**
5981	**298449**	**298502**
5982	**298449**	**298502**
6299	**283287**	**283304**
7031	**283273**	**283290**
7045	**298449**	**298502**
7045	**298449**	**298502**
7113	**283223**	**283264**
7184	**304819**	**304832**
7648	**298497**	**298551**
8100	**283218**	**283260**
8431	**283208**	**283250**
8508	**298478**	**298532**

decor Kronospan	diameter: 13 mm	diameter: 20 mm
8509	**298495**	**298549**
8547	**298471**	**298525**
8548	**283289**	**283306**
8622	**283275**	**283292**
8656	**298497**	**298551**
8681	**298446**	**298499**
8685	**283218**	**283260**
8685	**283218**	**283260**
8921	**283200**	**283242**
8953	**505516**	**507403**
8995	**283211**	**283253**
9455	**283214**	**283256**
9551	**298461**	**298514**
9614	**283202**	**283244**
9614	**283286**	**283303**
9763	**283229**	**283269**
K001	**283203**	**283245**
K002	**298487**	**298541**
K004	**283205**	**283247**
K005	**298487**	**298541**
K006	**298483**	**298537**
K007	**298475**	**298529**
K008	**283216**	**283258**
K011	**298471**	**298525**
K014	**283216**	**283258**
K018	**283208**	**283250**
K019	**298487**	**298541**
K020	**283197**	**283239**
K020	**505516**	**507403**

Decor matching is only approximate and can match only a certain part of the surface. Cover cap suitability to a specific decor is not guaranteed.

- items must be ordered as a whole package of 100 (60) sheets (13 mm – 2,000 pcs, 20 mm – 900 pcs)

self-adhesive cover caps

Matching to Kronospan decors

decor Kronospan	diameter: 13 mm	diameter: 20 mm
K021	**283211**	**283253**
K022	**298487**	**298541**
K078	**283199**	**283241**
K079	**298481**	**298535**
K080	**283203**	**283245**
K081	**298471**	**298525**
K082	**298482**	**298536**
K083	**298477**	**298531**
K085	**298471**	**298525**
K086	**283211**	**283253**
K087	**283208**	**283250**

decor Kronospan	diameter: 13 mm	diameter: 20 mm
K088	**298477**	**298531**
K089	**298487**	**298541**
K090	**298482**	**298536**
K096	**304825**	**304837**
K100	**298460**	**298513**
K105	**298475**	**298529**
K107	**298487**	**298541**
K349	**298494**	**298548**
K350	**304818**	**304831**
K352	**298493**	**298547**
K354	**298474**	**298528**

decor Kronospan	diameter: 13 mm	diameter: 20 mm
K355	**298493**	**298547**
K356	**283208**	**283250**
K358	**283211**	**283253**
K359	**283210**	**283252**
K360	**298483**	**298537**
K361	**298483**	**298537**
K362	**298479**	**298533**
K363	**283211**	**283253**
K364	**298479**	**298533**
K365	**283199**	**283241**
K366	**304821**	**304833**

Decor matching is only approximate and can match only a certain part of the surface. Cover cap suitability to a specific decor is not guaranteed.

- items must be ordered as a whole package of 100 sheets (60) sheets (13 mm – 2,000 pcs, 20 mm – 900 pcs)

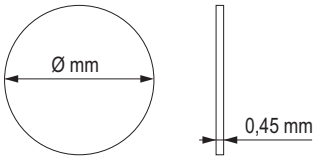

- package – Ø 13 mm, 20 pcs sheet
  – Ø 20 mm, 15 pcs sheet
- items must be ordered as a whole package of 100 (60) sheets (13 mm – 2,000 pcs, 20 mm – 900 pcs)

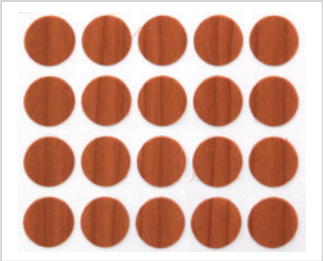

package ∅ 13 mm = 20 pcs

package ∅ 20 mm = 15 pcs

plastic cover caps

- package: confirmat screws, screws – 250 pcs, cams – 500 pcs

colour	suitable for decor	confirmat screw	screw	cam
white	white 101	**KR001**	**KR021**	**359637**
beige	birch 1715, H1733, 375, H1521	**KR002**	**KR022**	**359641**
pine	pine 353	**KR003**	**KR023**	×
blue birch	blue Capri 121, blue birch	**KR004**	**KR024**	×
grey maple	grey 881, 1700, platinum 859, grey maple	**KR006**	**KR026**	×
beech D	beech, 1796, 381, 757	**KR007**	**KR027**	×
beech	1783, oak 740	**KR008**	**KR028**	×
light Tyrol beech	H1518, H1582, H1887, H1932, H1954	**101313**	**101362**	×
alder	637	**KR009**	**KR029**	×
brown-red calvados	calvados 1792, H 1951, cherry 9345	**KR010**	**KR030**	×
rustic knot	walnut 729, rustic knot	**KR011**	**KR031**	×
cherry	cherry 344	**KR012**	**KR032**	**359643**
mahogany	mahogany 775	**KR013**	×	×
palisander	wenge 854, walnut 8953	**KR014**	**KR034**	**359638**
black	black 190	**KR015**	**KR035**	**359639**
stained oak 35706		**101321**	**101371**	×
natural oak	H1348, H1344, H3382, H1334, 8431	**101323**	**101373**	×
light oak	H3400, H3386	**101325**	**101375**	×
apple	H1954	**101330**	**101380**	×
stained walnut	729, H1709, H3734	**101340**	**101391**	×
aluminium	F509, 881	**101355**	**101406**	×
anthracite	shades of anthracite	×	×	**359642**
sonoma	sonoma	×	×	**359644**

- matching to decors is indicative, the colour of the cam cover cap does not 100% correspond to the colour of the other cover caps

cam cover cap

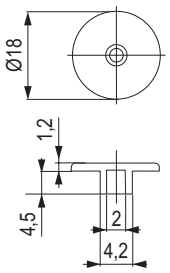

screw cover cap

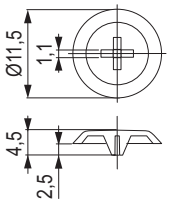

confirmat screw cover cap

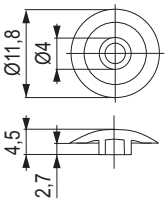

dowels, biscuits, patching materials

KNAPP®

Simplify your work

- No special power tools are needed to install the biscuits.
- Cost-effective.
- Option for all types of wood or wood-based materials.
- Not only slide-in, but also snap-on connections.
- Easy installation of ready-to-assemble parts on the assembly – basically without power tools.

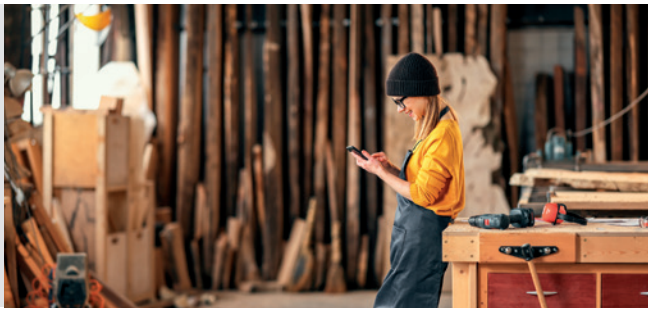

Plastic slide-in biscuit connector

YouTube

code	description
463414	K053 SUNNY slide-in biscuit connector (plastic)

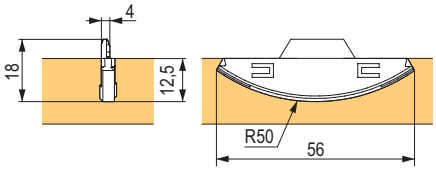

Plastic slide-in biscuit connector

YouTube

code	description
463415	K023 CHAMP slide-in biscuit connector (plastic)

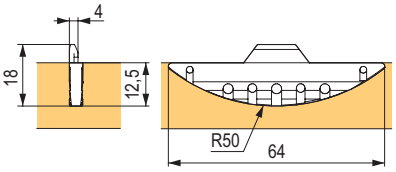

Metal slide-in biscuit connector

YouTube

code	description
463413	K049 SILVER slide-in biscuit connector (aluminium and zinc alloy)

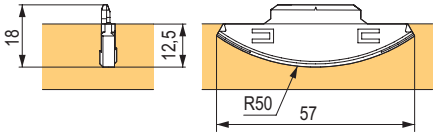

Plastic compact connector

YouTube

code	description
463416	K058 FAST contact biscuit connector (plastic)

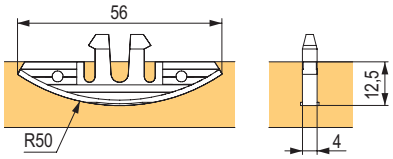

Metal slide-in biscuit connector

YouTube

code	description
463417	K026 METAL slide-in biscuit connector (1 pair of biscuits, 2× screw 3 ×13, 2× screw 3 × 25)

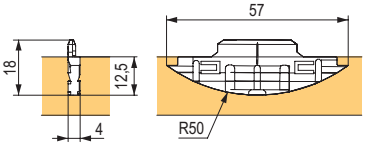

Knots

STRONG

code	diameter/thickness (mm)	material	package (pcs)
175624	10 / 7	spruce	500
01430	15 / 7	spruce	1000
01432	20 / 7	spruce	
01434	25 / 7	spruce	500
01436	30 / 7	spruce	
01437	35 / 7	spruce	250
101495	35 / 7	pine	500

dowels, biscuits, patching materials

Calibrated connecting dowels – birch

without adhesive

with adhesive

code	dimensions (mm)	package (pcs)
340719	8 × 35	8 650
344255	8 × 35 with glue	
362946	8 × 40	7 600
395167	8 × 35	1 000
396181	8 × 35 with glue	
396182	8 × 40	

- both types of dowels are suitable for standard dowelling, as well as for **automatic dowel machines**
- dowels are electronically tested for geometry, a much smaller probability of a defective piece
- version with glue is particularly suitable for adhesive injection automated machines – no nozzle cleaning after application, water (contrary to glue) will not dry or degrade the surface of the board

When using dowels with glue, water should be injected into the hole (1/3 to 1/2 of the depth) – water volume of ca. 0.2 to 0.4 cm^3 into each hole. The glue which is on the dowel is activated and begins to stick. Full hardening of the adhesive occurs within 24 hours.

Dowel marker

code	dimensions (mm)
11539	8

Dowel rod – beech

code	dimensions (mm)
01424	6 × 1 000
01457	8 × 1 000
01415	10 × 1 000
01418	12 × 1 000
100377	16 × 1 000

Resin patches

code	dimensions (mm)	material	package (pcs)
01420	68 × 13 × 8	spruce	500

Wooden dowels – beech

code	dimensions (mm)	pcs/kg
01449	6 × 35	1 500
01407	8 × 30	950
01413	8 × 35	845
01414	8 × 40	770
01406	8 × 50	640
01448	8 × 60	560
01422	10 × 40	500

- 1 kg package
- with grooves
- number of pieces may vary ± 7%

Kaiser biscuits

code	size	dimensions (mm)	thickness (mm)	package (pcs)	wood type
100964	0	45 × 15	4	1 000	beech
82907	10	53 × 19			
82908	20	56 × 23			
275621	20	56 × 23			birch

Beech biscuits

code	size	dimensions (mm)	thickness (mm)	package (pcs)
278089	10	53 × 18	3,75–3,9	1 000
227021	20	56 × 23		

End caps – caps with a pin

code	hole diameter (mm)	outer diameter (mm)	height (mm)	material	package (pcs)
101485	10	14	9	beech	100
101472	15	19	10	spruce	
101477				pine	
101482				beech	

KLICK plastic joint

KNAPP®

KLICK connection system

- Plastic joint.
- Simple joint.
- KLICK system for easy installation of decorative elements or connection of two parts in an unstressed joint.

KLICK plastic joint

YouTube

code	description
459397	K045 KLICK plastic joint

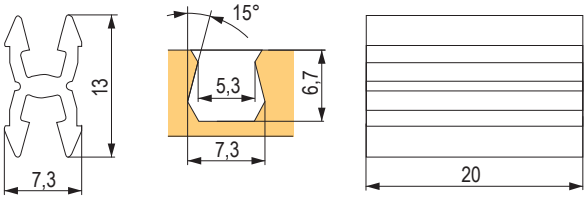

code	description
459400	K060 KLICKpro plastic edge joint

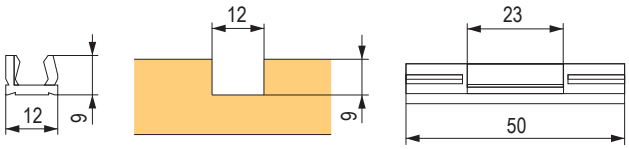

YouTube

code	description
459399	K048 sKLICK plastic joint + screw

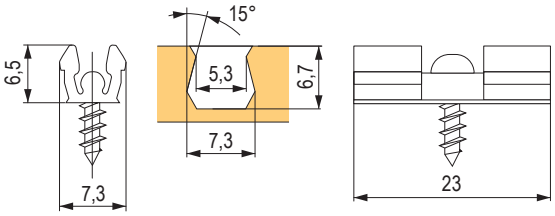

Accessories

code	description
459401	K046/F TCT router, herringbone grooves 8 mm

KNAPP®

concealed self-locking cabinet body joint

High-strength – not demountable

- Easy transport – elements of the cabinet body can be transported in individual parts. Final assembly is possible on site.
- No bonding – due to the serrations on the outside of the plastic wall plug and the anchoring of the steel of the screw at the base of the wall plug, QUICK-SET does not require any adhesive during use.
- Can be used with an automatic wall plugs machine, CNC or wall plug drill bits.

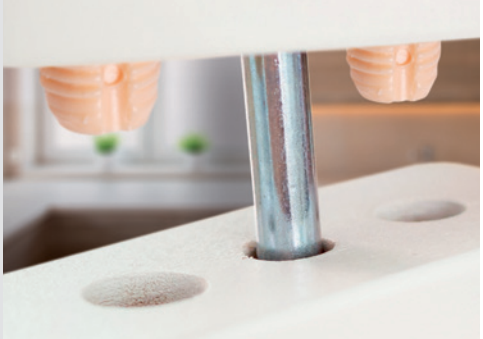

Plastic dowel

code	description
487125	6 × 28 mm
459402	8 × 36 mm
459403	8 × 50 mm

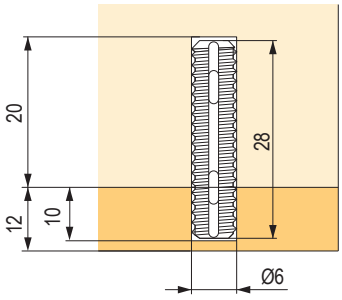

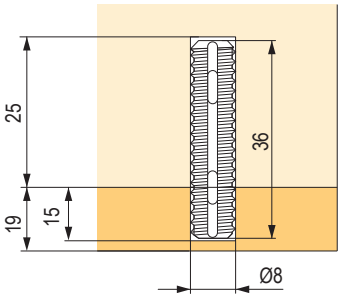

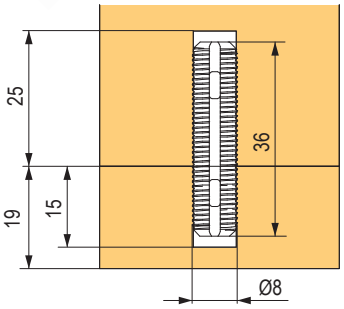

Accessories

code	description
459410	Z011 PU+ single component adhesive

Safe – high load capacity values:

- 60 kg for 19 mm particle boards
- 73 kg for 16 mm MDF
- 73 kg for 17 mm solid wood
- 85 kg for 17 mm beech

grub and drive-in nuts

Grub nut with collar

code	inner thread	hole diameter (mm)	length L (mm)
15031	M5	7	10
351869	M6	8	10
15021			13
283069			17
292628			20
15022	M8	10	15
351871			20
351870	M10	12	18

- material – zinc alloy

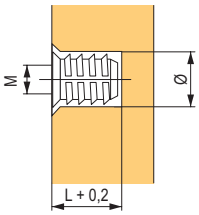

Grab nut without collar

code	inner thread	hole diameter (mm)	length L (mm)
95398	M6	8,5	13
229901	M8	10	15

- material – steel (yellow zinc)

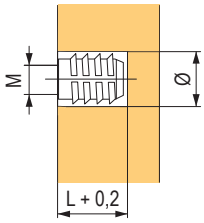

Expansion Rawlplugs

code	name	inner thread	hole diameter (mm)	length L (mm)
15025	BU08	M4	5,2	10

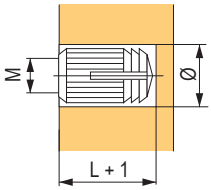

Expansion Rawlplugs

code	name	inner thread	length L (mm)
351864	BU33	M4	7,5

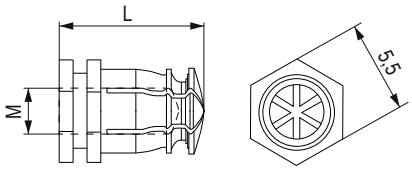

Expansion Rawlplugs

code	name	inner thread	length L (mm)
15023	BU12	M6	12

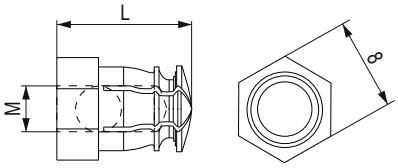

Rawlplugs

Rawlplug

code	inner thread	hole diameter (mm)	length L (mm)
15030	M6	8,5	15,5

- material – galvanised steel

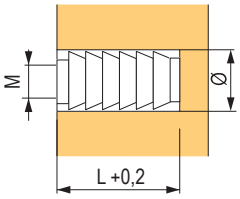

Drive-in nut

code	inner thread	hole diameter (mm)	length L (mm)	diameter H (mm)
101518	M6	8	9	19
101519	M8	10	11	22
101521	M10	11	12	25

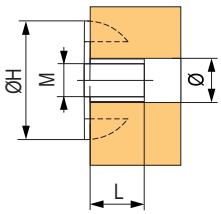

Plastic Rawlplugs

code	name	inner thread	hole diameter (mm)	length L (mm)
15018	BU11	M4	8	11,5
97129	BU61	M6		

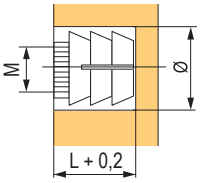

industrial staples

Type 352/92

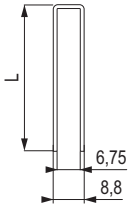

code	length L (mm)	package (pcs)
260099	18	6 000
265864	20	5 200
162313	25	4 000
277855	30	3 600

- high-quality staples suitable for most used staple guns
- for attaching the rear sides of cabinet bodies, etc.
- compatible with systems 92 (Akes, Atro, Bea, Bostitch, Haubold, Josef Kihlberg, Nikema, Omer, Senco, Schneider and system H – Holzher, Prebena)
- rolling dimensions: 1.05 × 1.28 mm
- inner/outer dimension: 6.75/8.8 mm
- galvanised

Type 364/90

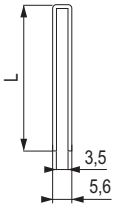

code	length L (mm)	package (pcs)
283362	20	3 600
162314	25	6 000
283363	30	4 800

- high-quality staples suitable for attaching the rear sides of cabinet bodies, etc.
- compatible with systems 90 (Akes, Atro, Bea, Bostitch, Haubold, Fasco, Josef Kihlberg, Nikema, Omer, Schneider, Tackwise, Wurth), Prebena E, K, Senco L, Holtzer G
- rolling dimensions: 1.05 × 1.27 mm
- inner/outer dimension: 3.5/5.6 mm
- galvanised

Type 343/99

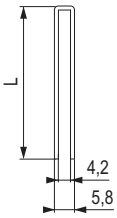

code	length L (mm)	package (pcs)
228911	15	9 600
228912	18	4 200
228913	20	7 200
228914	23	3 200
228930	25	6 000
228918	30	5 200

- compatible with systems: BeA 99 , Prebena ES, Bosch 55, Novus C, Rapid 14 – 606, Tacwise 91
- rolling dimensions: 0.78 × 1.13 mm
- inner/outer dimension: 4.2/5.8 mm
- galvanised

Type 338

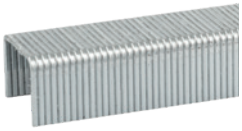

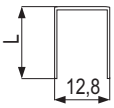

code	length L (mm)	package (pcs)
351783	8	39 200
351784	10	31 360
351785	12	25 480
351786	14	23 520
351787	16	19 600

- compatible with systems BeA 80 and 380
- upholstery staples, staples for manual, mechanical, electric and pneumatic staple guns
- outer dimensions: 12.8 mm
- wire thickness: 0.87 mm
- use: upholstery work, decorative work, assembly of foils, carpentry work

Démos

All for the furniture making

30 years with you

Services

We are with you from design to implementation

This is why Démos is popular with customers.

Offering quality services has always been the main goal of Démos. The services you need and the services you ask us for. You will see that there are many of them in the Services brochure, where we will give you an overview.

Download at www.demos24plus.com

connecting of worktops

Quick Techfor common thicknesses

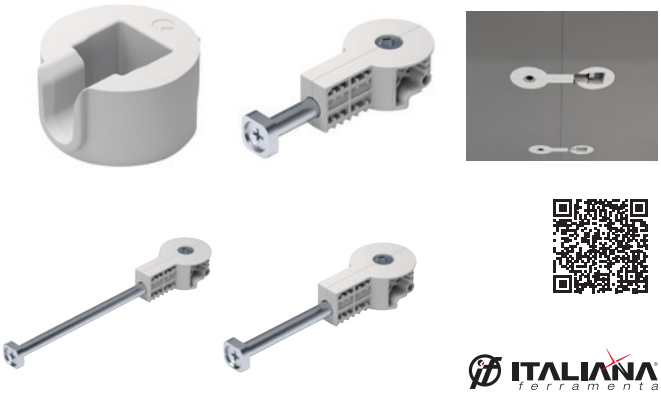

code	drilling pitch C (mm)	drilling diameter D (mm)	hole depth H (mm)	groove width B (mm)
396183	52	30	21	14
396184	150	30	21	14
507036	64	35	21	15
507037	100	35	21	15
507038	150	35	21	15

- efficient connecting of worktops and panels
- simple and quick installation, fixed connection
- for hex key S6, cordless screwdriver can also be used

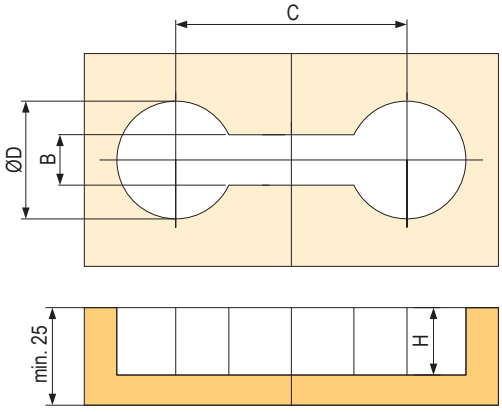

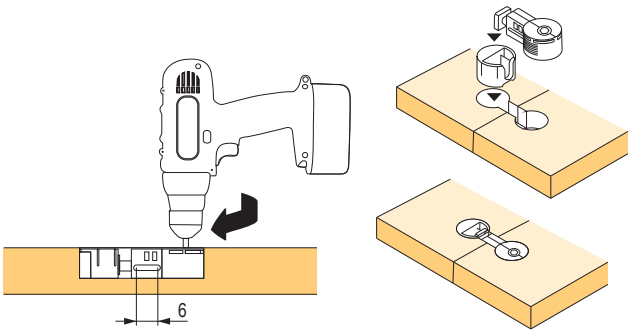

All-metal screwsfor common thicknesses

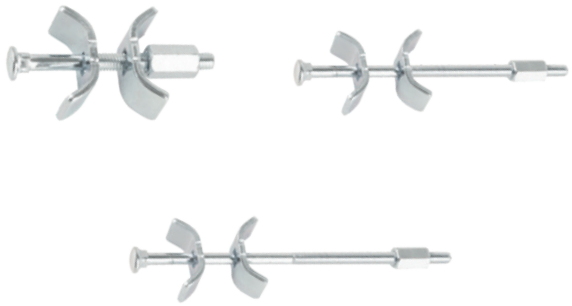

code	drilling pitch X (mm)	hole depth H (mm)
15600	65	20
15602	120	20
15605	150	20

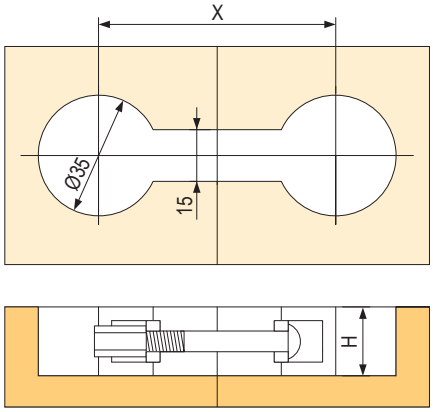

Screws for thin and compact worktops

code
459398

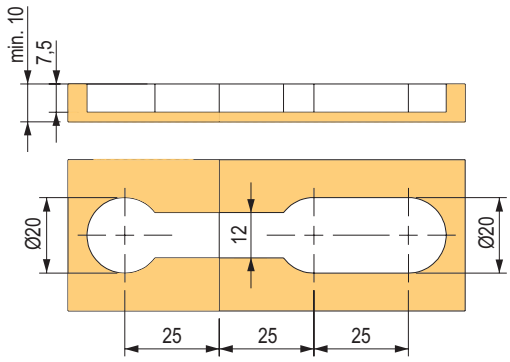

Tightening adapters with a ball head

code	description
469488	angular wrench
469489	straight bit (89 mm)

Pull IN

code	finish
283321	nickel
507042	black nickel

- high strength
- special shape of countersink causes tightening connecting parts to each other
- suitable screw – euro screw with a countersunk head
- also possible to use a screw with countersunk head with a diameter of 4 mm, whereas it is necessary to change the hole size
- for euro screws, or for elegant appearance, we recommend a nickel-coated screw Spax 4 × 16 with raised countersunk head 360299

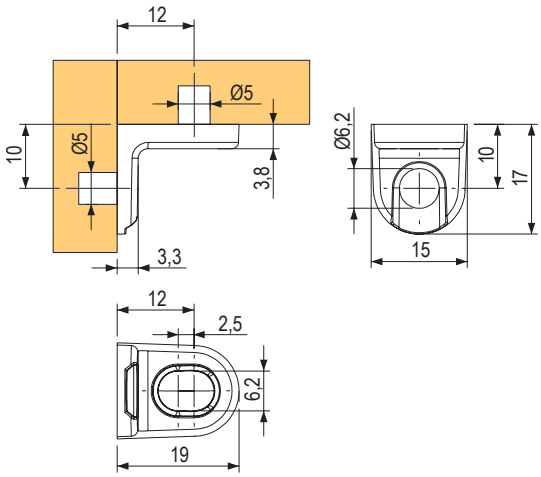

connecting elements

Connecting fittings cam – type EC

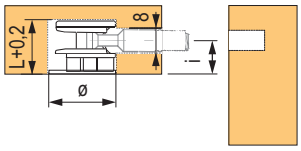

code	board thickness (mm)	diameter (mm)	length L (mm)	dimensions i (mm)	colour
15002	16	15	12,5	8	nickel
15003	18 / 20	15	13,8	9 / 9,5	zinc

- more massive design

Connecting fittings cam

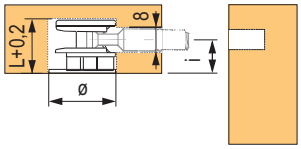

code	board thickness (mm)	diameter (mm)	length L (mm)	dimensions i (mm)	colour
229902	15 / 16	15	12	7,75	zinc
229903	18 / 20	15	13,5	9,3	zinc

Cam screw-in dowel – type TM

code	pitch i (mm)	drilling diameter (mm)	thread length L (mm)
347270	24	5	11
267430	34	5	11

- with euro thread

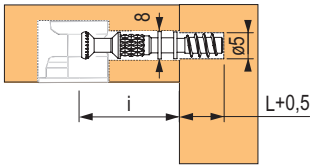

Quick cam screw-in dowel

code	pitch i (mm)	drilling diameter D (mm)	hole depth L (mm)
92794	24	8	11
157847	34	8	11

- cam screw-in dowel for faster assembly, vibration-resistant
- greater strength of joint by 30%
- high tolerance for positioning of cam holes (± 0.5 mm)
- pre-installation option during manufacturing
- saves time during installation – no screwing
- the same hole diameter as for dowels – no need to change the drill

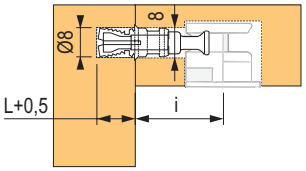

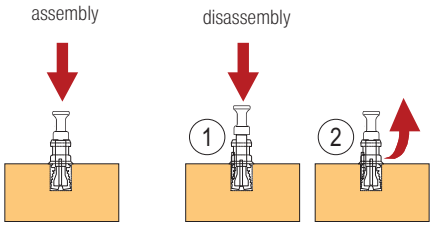

Cam screw-in dowel – type TE

code	pitch i (mm)	drilling diameter (mm)	thread length L (mm)
92796	24	5	9,5
15020	34	5	11

- with euro thread

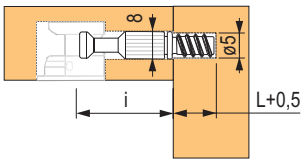

connecting elements

Angular cam screw-in dowel

code	pitch (mm)	hole diameter (mm)
229898	44	7

- for angular connection from 90° to 180°

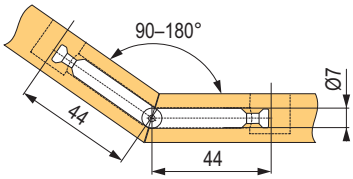

Cam screw-in dowel M6

code	pitch i (mm)	thread	thread length L (mm)
15092	34	M6	9,5

- for use in metal components or with drill-in nuts

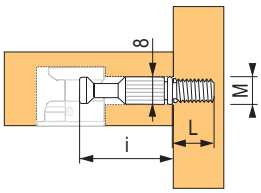

Double cam screw-in dowel

code	pitch (mm)	hole diameter (mm)
229899	34–19–34	8

- for 19 mm centre panel

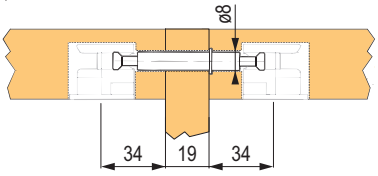

Bolts for barrel nut

92791

92792

code	thread	diameter (mm)	length L (mm)
92791	M6	12	50
92792	M6	12	60

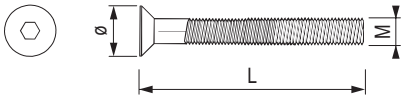

Barrel nut BA02

code	inner thread	diameter (mm)	length L (mm)	dimensions i (mm)
92793	M6	10	14	9

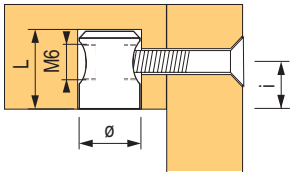

Connecting fittings

code	Blum code	colour
13716	42.0700.01	white
13715	42.0700.01	brown

- connecting fittings for cabinet body with a connecting bolt
- plastic housing with a pre-mounted cam from zinc
- connecting bolt made of zinc, die casted

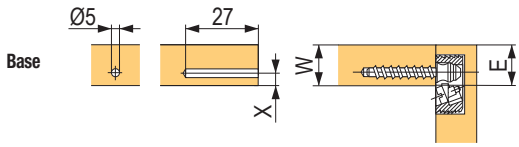

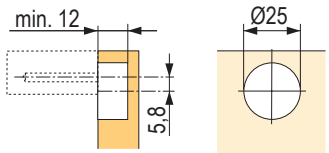

connecting elements

Target

- connection for heavy load, high strength and easy assembly
- appropriate to add wooden dowels
- suitable for both series and piece furniture
- practical solution for a wide range of applications
- bolt joint will ensure a firm connection, use of cordless tools will speed up assembly
- easy pre-assembly
- suitable for materials with a thickness of 15–25 mm

Target J10

code	thread type	counterpart in the cabinet body	type
507045	M6	**15021**	M6 × 13
		283069	M6 × 17
		292628	M6 × 20
507046	11 mm euro thread	×	×

- complete set includes connector dowel and fixing screw
- the option with M6 thread must be supplemented with a suitable counterpart in the cabinet body

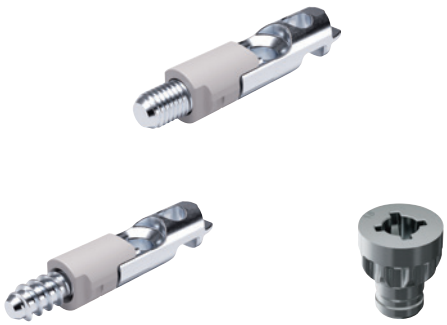

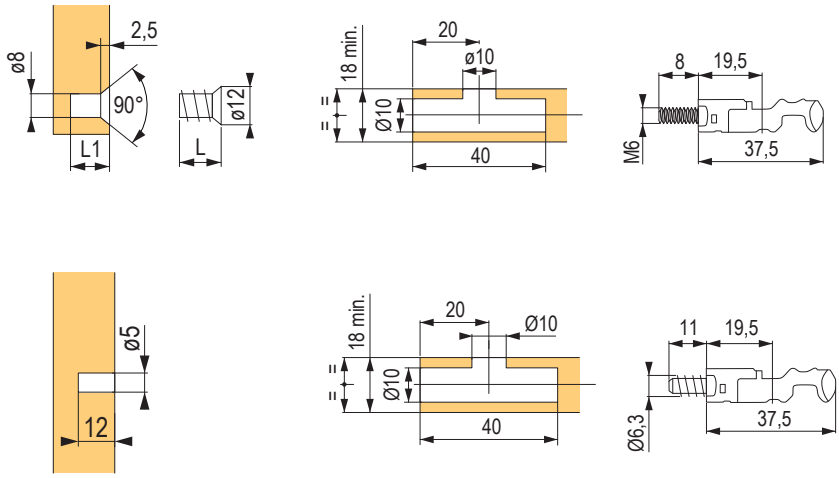

Target J12

code	thread type	counterpart in the cabinet body	type
507048	M6	**15021**	M6 × 13
		283069	M6 × 17
		292628	M6 × 20
507049	12 mm euro thread	×	×

- complete set includes connector dowel and fixing screw
- the option with M6 thread must be supplemented with a suitable counterpart in the cabinet body

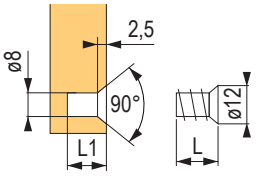

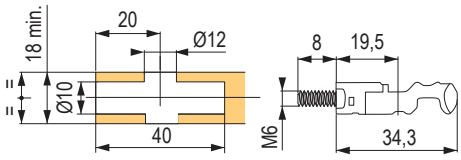

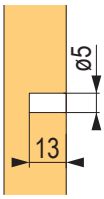

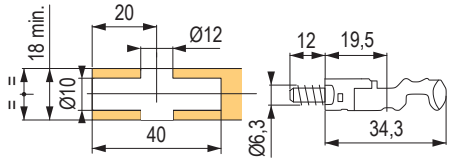

Screw cover cap

code	description
360956	for J12 white (d. 15 mm)

Drilling jig for Target

- drilling jig can also be borrowed, customer centre will inform you about conditions

code	description
359816	for 16–18 mm boards

code	description
359817	for sides

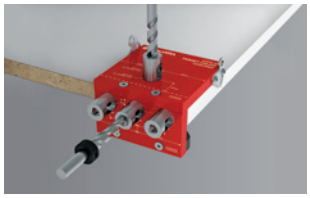

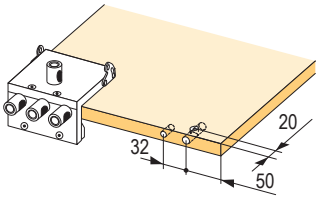

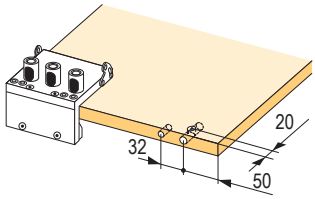

connecting elements

PAD – permanent dowel

228817

188754

code	description
228817	normal – green
188754	weak – black

- fast, non-detachable connection
- weak – black version is designed for materials with thinner structure
- we recommend testing it before mass production
- we recommend equipping the part with an edge

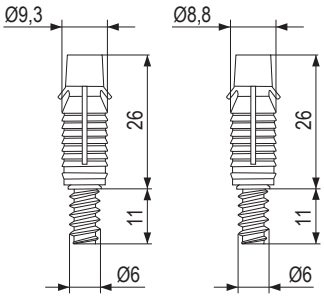

normal
228817

weak
188754

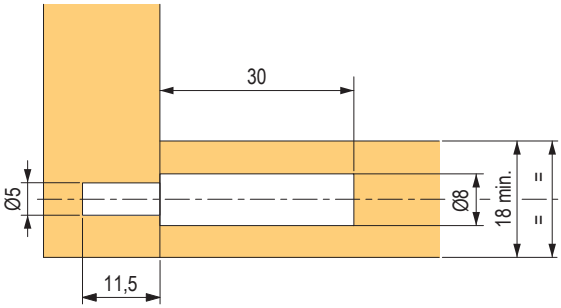

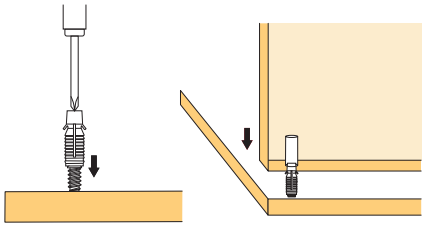

QUICK-SET

YouTube

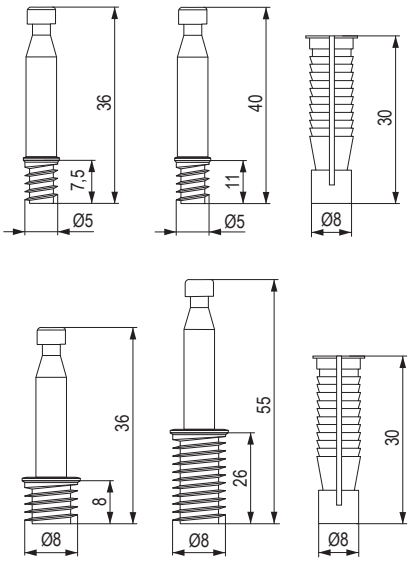

code	description
459417	Z5058 QUICK-SET 5 mm (wall plug + pin connection)
459418	Z5057 QUICK-SET 8 mm (wall plug + pin connection)

VIS bed connector

Set contains:

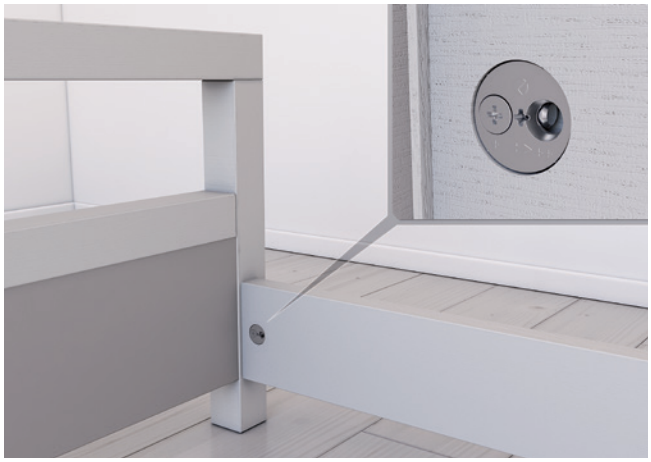

code	description
283322	VIS set

- use the included grub nut M8 or a through nut (for board thickness 18 mm) for installation
- tolerance up to 1.2 mm

Set contains:
- connector dowel
- grub nut M8 × 15
- VIS body
- bolt with cone nut
- through nut for fixing to problematic materials
- tolerance up to 1.2 mm
- for materials with a thickness of 19 mm and more

When using several pieces, gradual tightening is not necessary, just screw after putting onto connector dowel. The design enables a fixed connection thanks to two different positions.

A (mm)	B (mm)	C (mm)
19	16,5	0,3
20	17,5	0,8
22	19	1,8
25	20,5	3,3
30	23	5,8

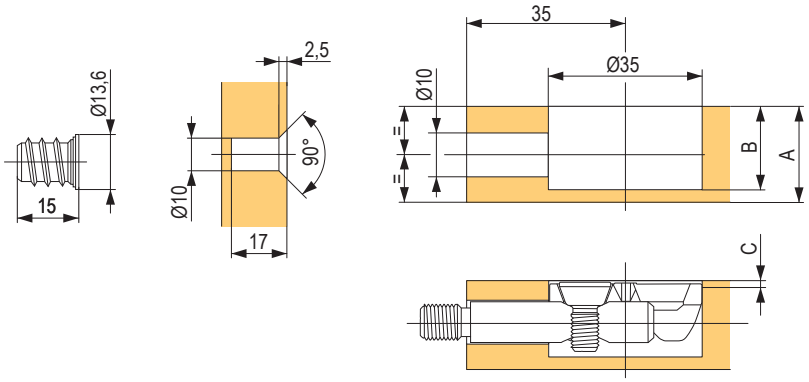

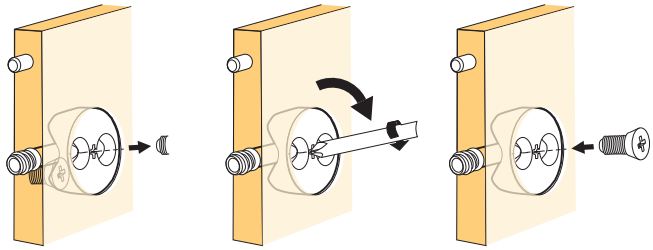

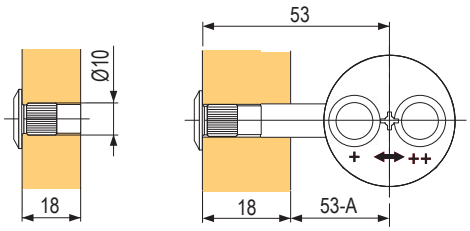

simple tightening: turn to change from + to ++

Spiral Lock

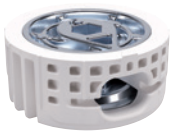

- for heavily stressed connections
- optimal pressure distribution
- protection against stripping and loosening of connection
- fast connection, a cordless screwdriver can be used
- min. board thickness: 19 mm

code	description
228818	cam M8 / 55 mm

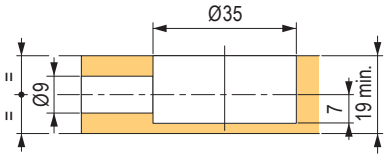

code	description
228821	spiral lock bolt, 55 mm

- bolt with M8 thread
- use with a suitable grub nut M8 (15022)

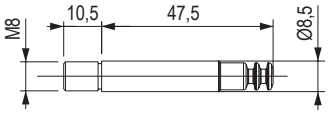

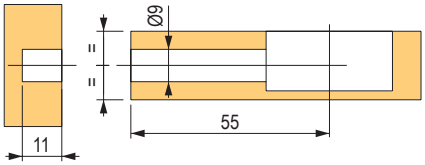

code	description
228822	twin bolt

- double bolt
- pitch: 2 × 35 mm

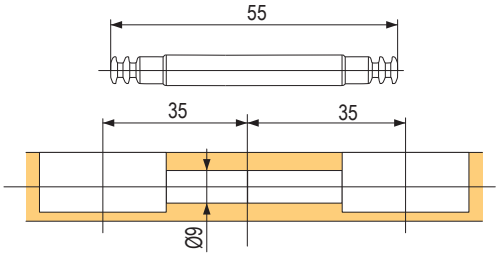

code	description
228823	white cover cap

- material: plastic
- diameter: 35 (38) mm
- white colour

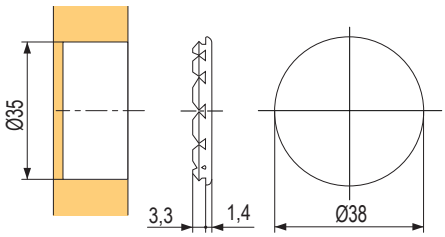

code	description
288644	90° bolt

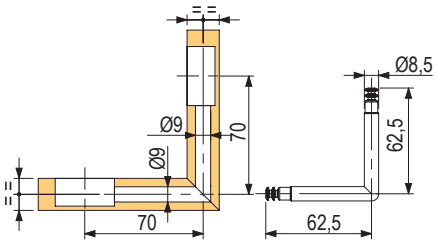

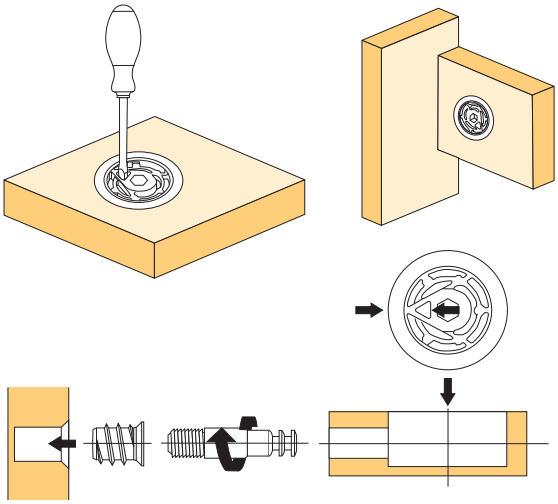

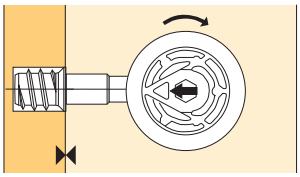

shelf supports and connectors

Shelf support – Maori

- fixed connection of parts, also suitable for higher loads (libraries, cabinets, etc.)
- it consists of two parts – plastic for the shelf and a zinc casting screwed to the body
- shelf part can be fastened using a screw with countersunk head 3 ×16
- including a wall plug with a screw, for a 5 mm hole
- meets the EN 14749/05 standard

code	description
268928	shelf part for inserted option
507052	shelf part for full-loaded option

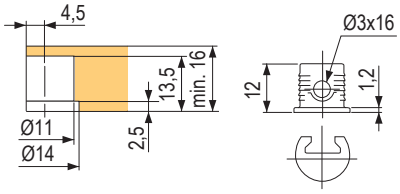

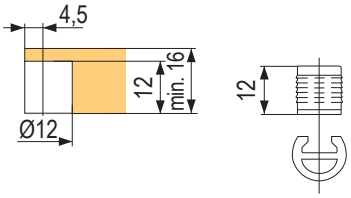

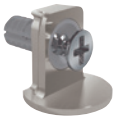

code	description
268929	body part

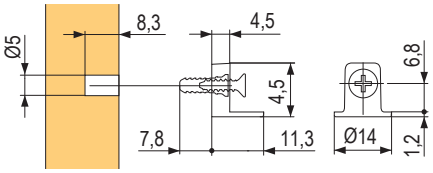

Shelf support – Kintai

- elegant shelf support
- simple and fast assembly without the need for tools
- joint can be disassembled repeatedly (for easy transport)
- shelves positions can be changed according to your preferences
- **minimum shelf thickness: 16 mm**
- meets the EN 16337/2013 standard

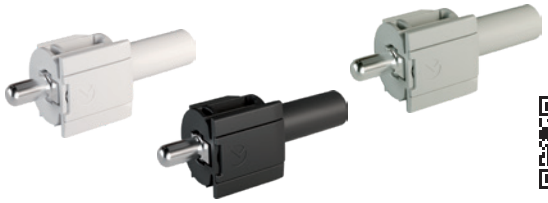

code	colour	package
414265	white	1
414267	grey	
414269	anthracite	
393131	white	100
393132	grey	
393133	anthracite	

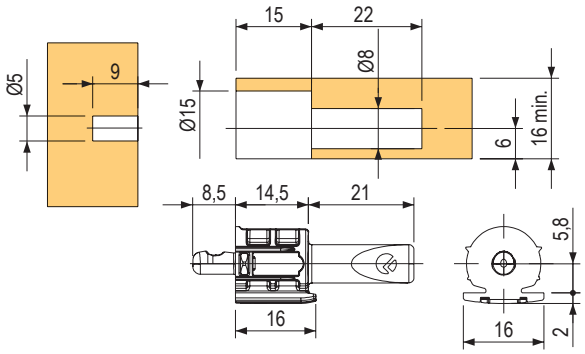

466501

471903

code	description
466501	mounting template for shelves 15–30 mm
471903	drill bit with accessories for Kintai fittings

shelf supports and connectors

PK2 Pro shelf support

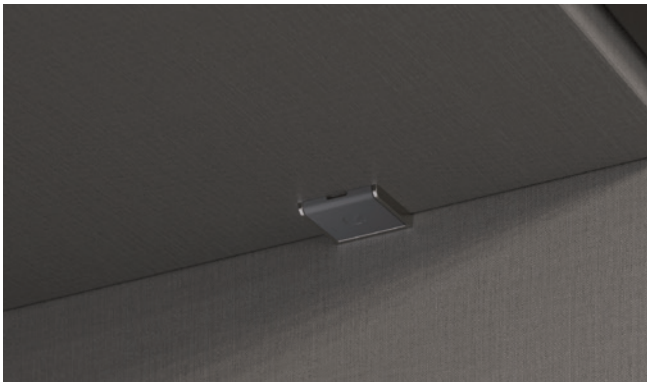

- for shelves min. 18 mm
- supports with top drilling
- firm shelf fastening
- meets the EN 14749/05 standard

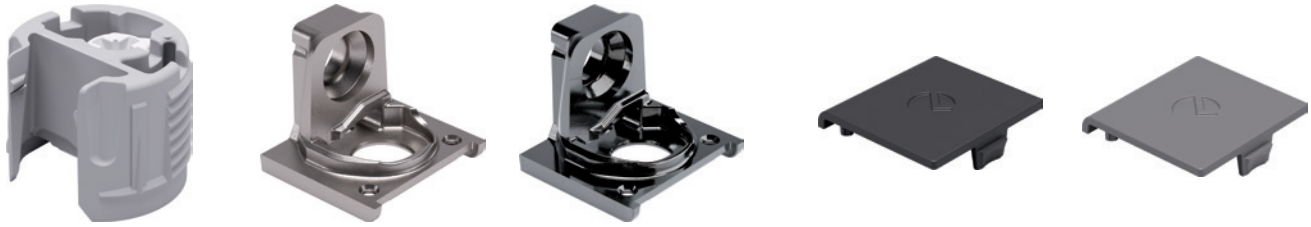

code	description
507053	nickel / grey
507054	black nickel / anthracite

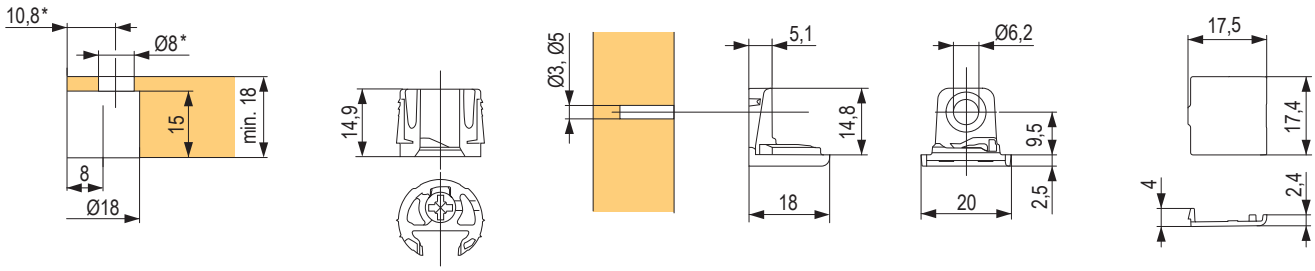

shelf supports and connectors

Simple shelf cam – SE02

code	colour	board thickness (mm)	drilling diameter (mm)	drilling depth L (mm)	material
15005	grey	18 / 20	20	14	plastic
15017	grey	18 / 20	20	14	plastic
15004	black	18 / 20	20	14	plastic
15000	white	18 / 20	20	14	plastic
405385 [1]	silver	18 / 20	20	14	zinc alloy

[1] it is necessary to order a pin for this cam (code: 407349)

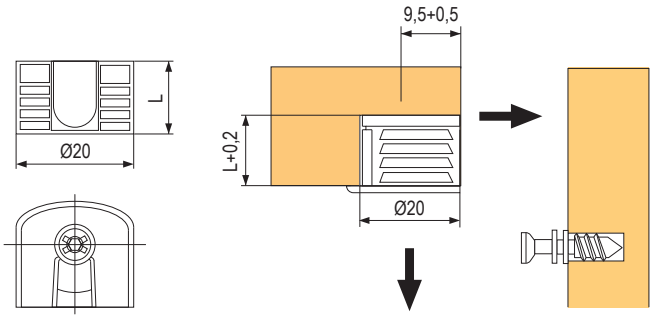

Double shelf cam

code	name	thickness (mm)	material	colour
405386 [1]	SE14	min. 18	zinc alloy	silver

[1] it is necessary to order a pin for this cam (code: 407349)

Shelf cam pin with euro thread

code	drilling diameter (mm)	drilling depth L (mm)
229900	5	7,5
407349	5	11
15006	5	12

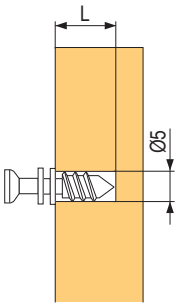

Did you know that shelf load capacity is significantly influenced (apart from the thickness and shelf material) by its dimensions, load capacity of the fastening elements and the material to which the shelf is attached? For example, plasterboard walls without braces have a significantly lower load capacity and even when anchoring to braces, deflections may occur. In the figure below, fastening components can break and holes in the cabinet body will be damaged. In case of a shorter or thicker shelf (without deflection), they would withstand the load without difficulty.

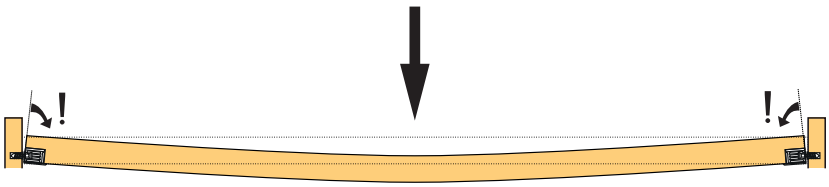

shelf supports and connectors

Unico

92689

229797

code	description	finish	inner diameter (mm)
92689	pin	nickel	5
229797	threaded pin	nickel	5

- easy transport of assembled furniture
- shelf position can be changed arbitrarily
- minimum shelf thickness: 15 mm
- version with thread for hole 5 mm
- reinforces bodies
- meets the EN 14749/05 standard

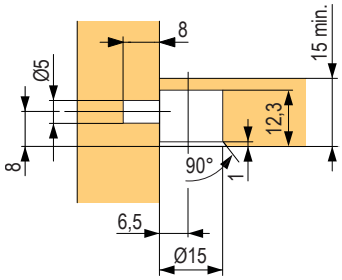

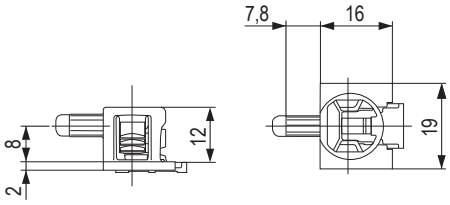

steps

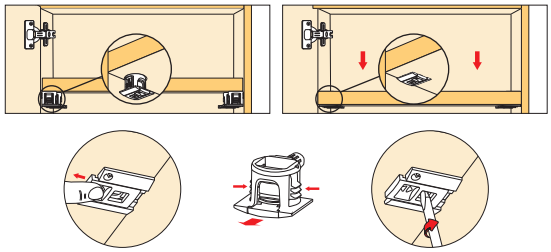

Flipper

Shelf part

code	colour
228825	grey
228826	white
288689	transparent
494785	black

- supports with top drilling
- min. shelf thickness: 14 mm
- when using threaded pins, it reinforces construction
- meets the EN 14749/05 standard (when using a threaded pin) setting safety requirements for housing and kitchen furniture

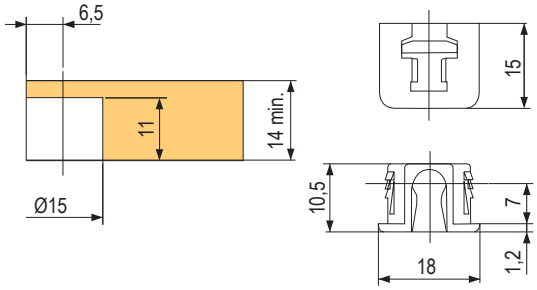

Pins

228827

228828

code	description
228827	smooth pin, 5 mm / l. 8.5 mm ZB
228828	threaded pin, 5 mm

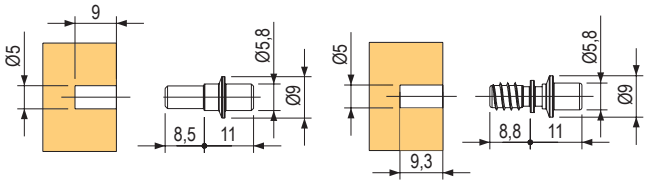

Drilling jig – Flipper, Unico

code	description
466501	mounting template for shelves 15–30 mm
459936	drill bit with accessories 15 × 90 mm

- drilling jig to facilitate the use of shelf supports Flipper and Unico
- creation of milling for Flipper and Unico supports by a single operation

466501

459936

Shelf supports

11504

11509

11508

306124

11505

11518

507055

507056

code	finish	outer diameter (mm)	inner diameter (mm)
11504	brass	5	3
11509	nickel	5	3
507055	black	5	3
11508	nickel	5	5
306124	white zinc	5	5
507056	black	5	5
11518	nickel	7	5

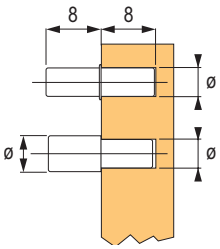

Shelf support with pin

code	finish	diameter (mm)
405324	nickel	5
11498	nickel	5

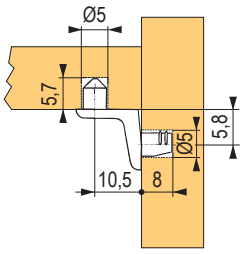

405324

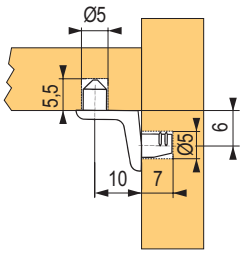

11498

Shelf support without pin

code	finish	diameter (mm)
405323	nickel	5
11495	nickel	5

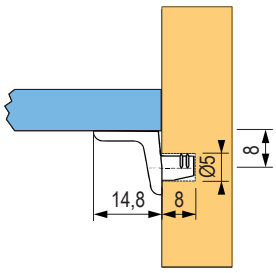

405323

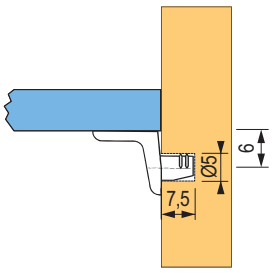

11495

supports for glass shelves

With rubber rings

code	colour	finish	diameter (mm)
11499	black	nickel	5
392731	transparent	nickel	5

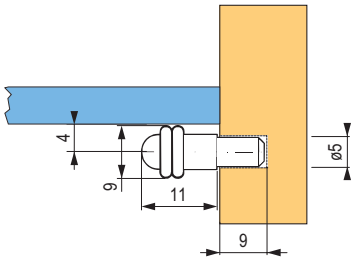

With the cup

code	finish	suction pad diameter (mm)	length (mm)
306125	white zinc + transparent	7	8

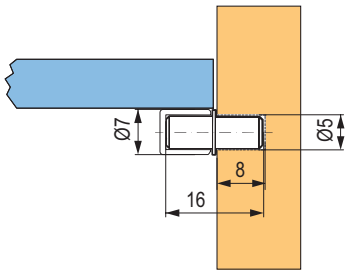

With suction cup

code	surface treatment
465868	nickel + transparent

- without suction pad dowel SP03

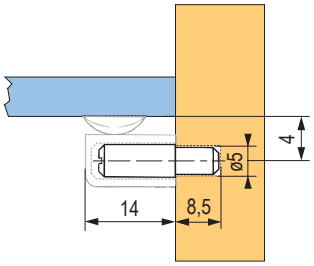

Shelf support for glass – Peki

code	finish	glass thickness (mm)
92688	nickel	4–10

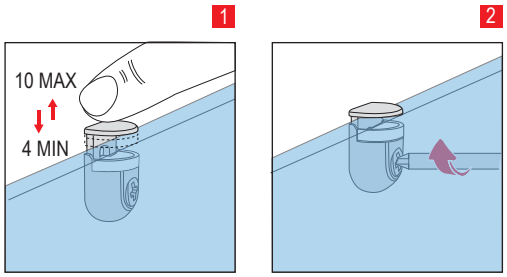

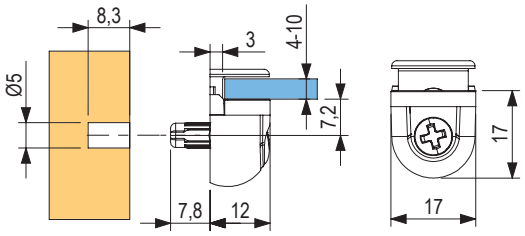

Shelf support for glass – Kubic

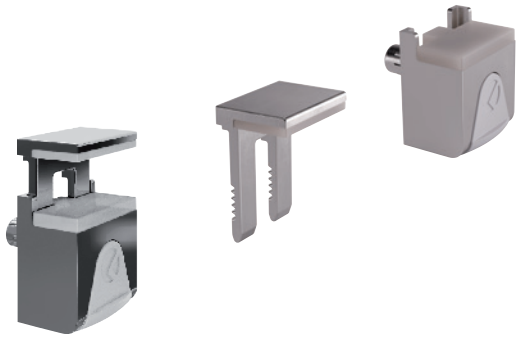

code	finish	glass thickness (mm)
157883	nickel + plastic	4–8

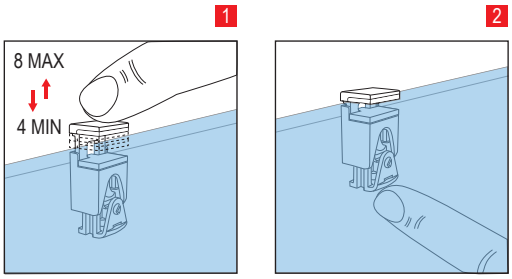

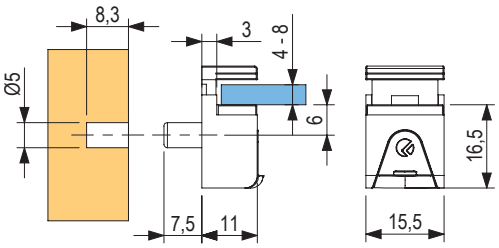

Shelf support for glass – Cobra

code	finish	glass thickness (mm)
15578	nickel	5–6
405388	nickel	8–10

- fixed attachment of the shelf using a bolt

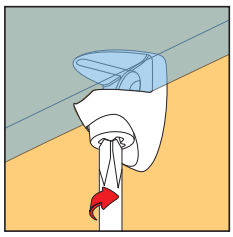

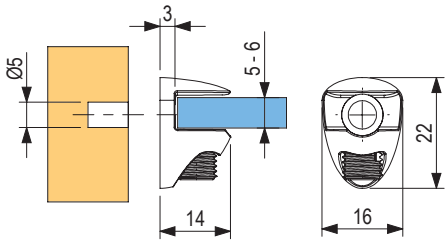

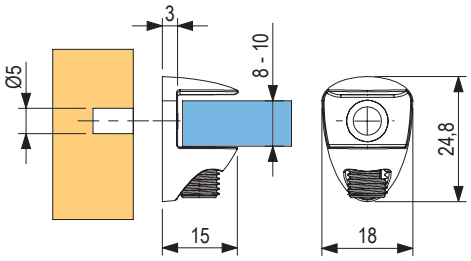

Shelf support for glass – Grace

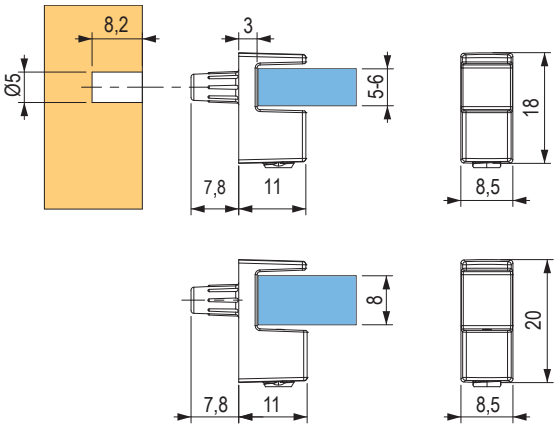

code	finish	glass thickness (mm)
507057	chrome	5–6
507058	nickel	
507059	black nickel	
507060	chrome	8
507061	nickel	
507062	black nickel	

- fixed attachment of the shelf using a bolt
- easy to assemble and disassemble

K Line glass

code	finish	hole diameter (mm)
157886	nickel	5
405391	black nickel	5

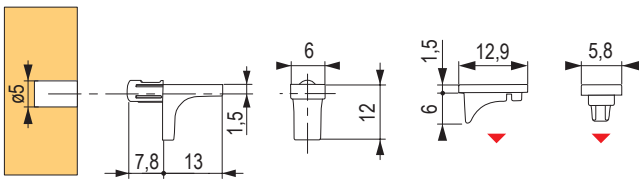

K Line

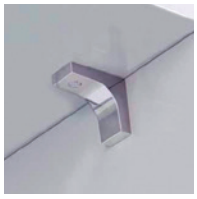

code	finish	hole diameter (mm)
283319	nickel	3
283320	zinc	5
157887	nickel	5
405390	black nickel	5

K Line pin

code	finish	hole diameter (mm)
228816	nickel	5
405389	black nickel	5

- version with a pin for better attaching

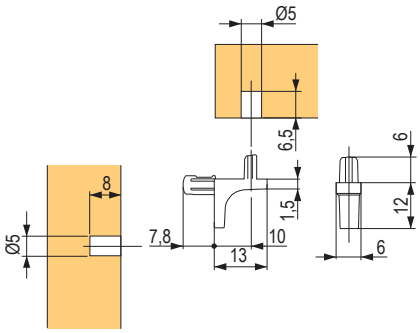

Support for glass shelves – Danina

code	finish	shelf thickness (mm)
15566	satin chrome	7,5

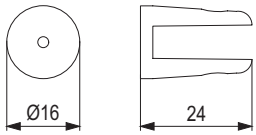

Moon

code	finish
405864	grey
405865	black matt

- load capacity for 320 mm shelf depth = 50 kg per pair
- shelf thickness: 15–50 mm

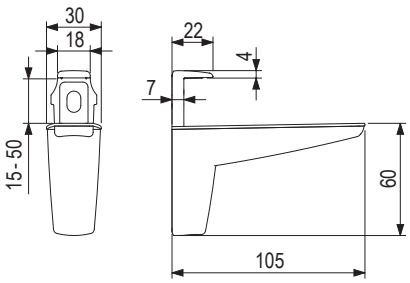

Moon S

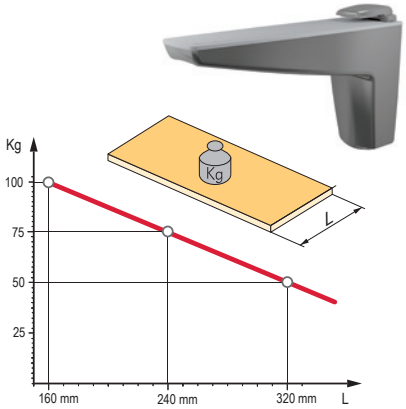

code	finish
405866	grey
405867	black matt

- load capacity for 320 mm shelf depth = 50 kg per pair
- shelf thickness: 4–25 mm

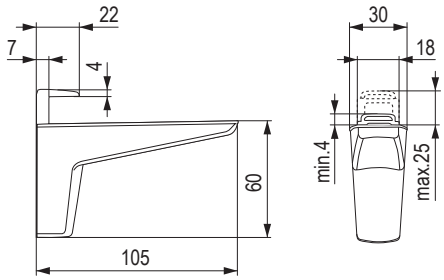

supports

Kalabrone Mini

165703

165705

165706

405408

405409

code	surface
165703	chrome
165705	silver
165706	stainless steel
405408	white
405409	black

- load capacity for 150 mm shelf depth = 12 kg per pair
- shelf thickness: 5–10 mm

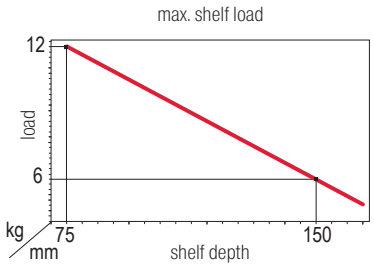

- The manufacturer is not responsible for damage caused by improper installation, poor underlayment, defective shelf, etc.

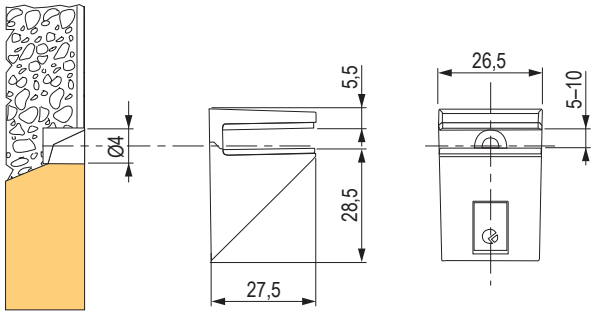

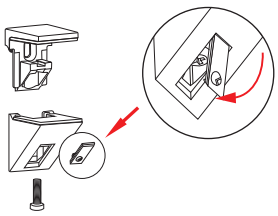

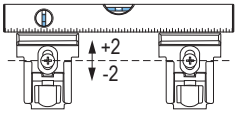

Kalabrone

160587

160588

405410

405411

code	finish
160587	silver
160588	stainless steel
405410	white
405411	black

- load capacity for 320 mm shelf depth = 50 kg per pair
- shelf thickness: 8–30 mm

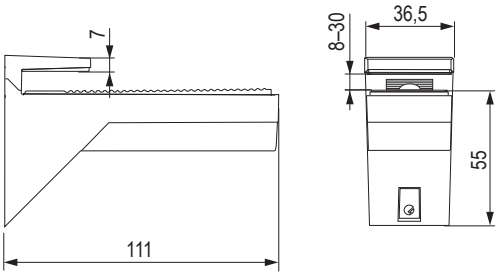

Kalabrone Maxi

160590 160591 405412

code	finish
160590	silver
160591	stainless steel
405412	white

- load capacity for 320 mm shelf depth = 50 kg per pair
- shelf thickness: 25–50 mm, possible adjustment of the shelf tilt

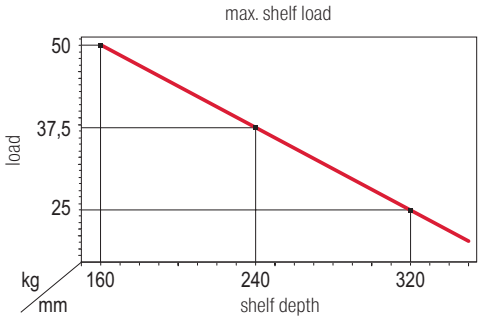

- The manufacturer is not responsible for damage caused by improper installation, poor underlayment, defective shelf, etc.

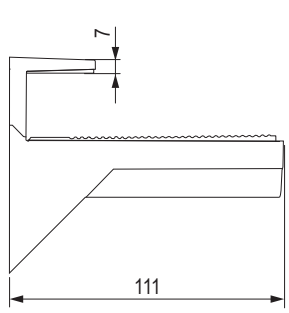

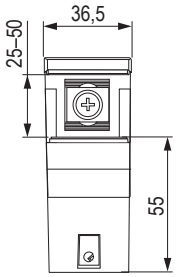

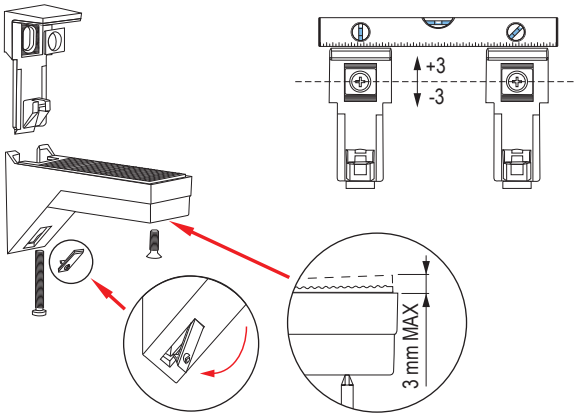

Glass holder

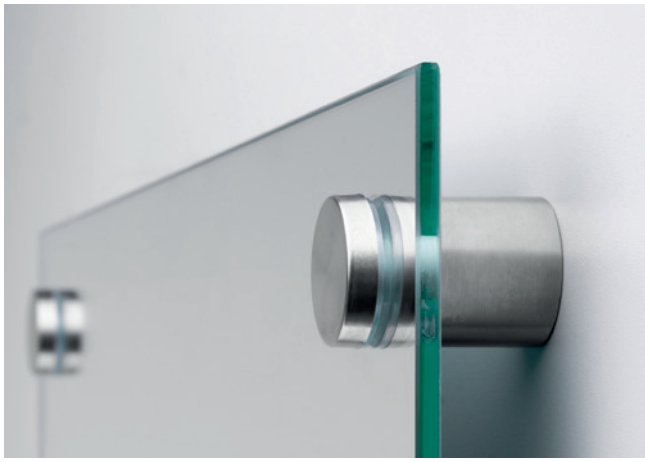

code	diameter (mm)	height (mm)	load capacity (kg)	surface treatment
406713	12	24	2	stainless steel imitation
406714	25	25	35	stainless steel imitation
406715	40	25	50	stainless steel imitation

- material: steel + stainless steel with plastic gasket
- not intended for humid and corrosive environments
- the stated load capacity is approximate, it depends on the quality of the wall mounting

supports

Cobrone

15647

15648

15649

code	finish	glass thickness (mm)
15647	satin nickel	5-6
15648	satin chrome	
15649	chrome	

- hole diameter according to the used screw

max. shelf load

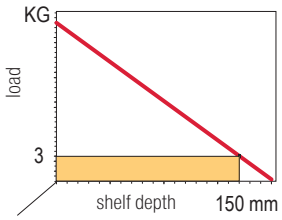

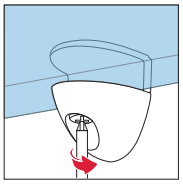

- The manufacturer is not responsible for damage caused by improper installation, poor underlayment, defective shelf, etc.

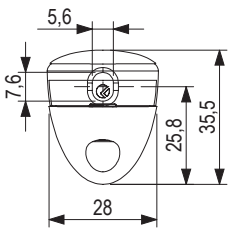

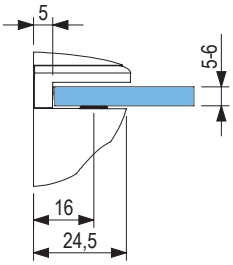

Kaiman

144489

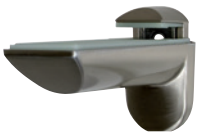
144490

405414

code	finish	shelf thickness (mm)
144489	silver	7-41
144490	stainless steel	7-41
405414	black	7-41

- load capacity for 320 mm shelf depth = 50 kg per pair
- possible adjustment of the shelf tilt

max. shelf load

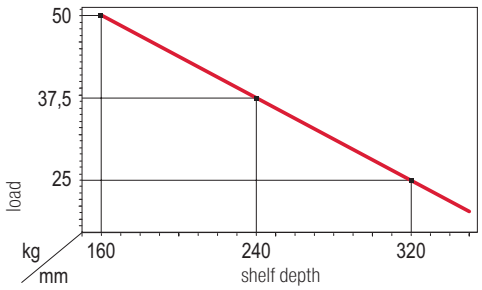

- The manufacturer is not responsible for damage caused by improper installation, poor underlayment, defective shelf, etc.

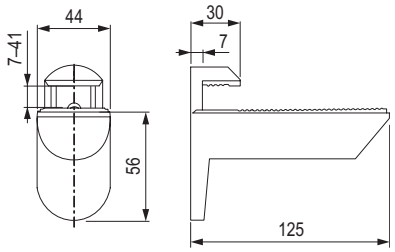

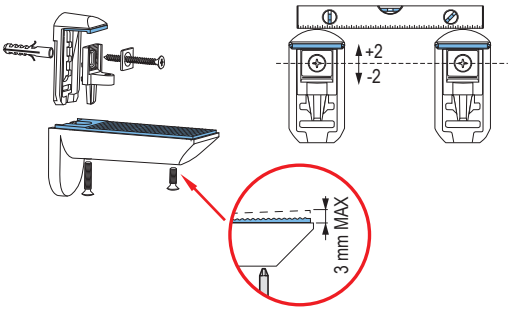

Toucans

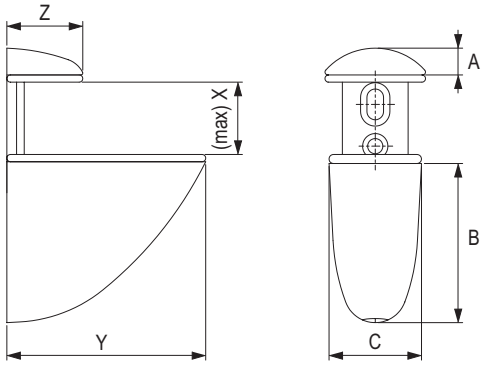

code	colour	description	load capacity (pair) / depth	X mm	Y mm	Z mm	A mm	B mm	C mm
36100	brushed nickel	small	20 kg / 20 cm	16	55	21	7,4	44	28,5
36101	brushed nickel	medium	30 kg / 30 cm	22	75,5	29,3	8,8	53	30,8
36102	brushed nickel	large	40 kg / 35 cm	32	106	40	13	70	39
36103	satin nickel	small	20 kg / 20 cm	16	55	21	7,4	44	28,5
36104	satin nickel	medium	30 kg / 30 cm	22	75,5	29	8,8	53	30,8
36105	satin nickel	large	40 kg / 35 cm	32	106	40	13	70	39
405876	chrome	medium	30 kg / 30 cm	28	70	26	11,5	52	30
405874	silver	small	20 kg / 20 cm	20	55,5	21	9	47	28,5
405875	silver	medium	30 kg / 30 cm	28	70	26	11,5	52	30
405878	silver	large	40 kg / 35 cm	30	99	38	14	68	36,5

supports

Quad 6

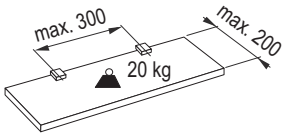

code	finish
15576	satin chrome

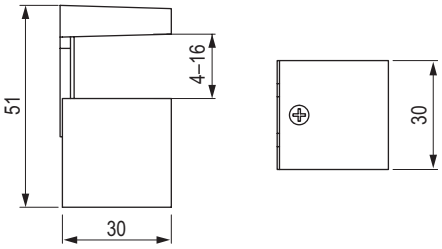

Quad 1

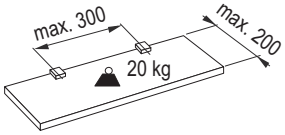

code	finish
15571	satin chrome

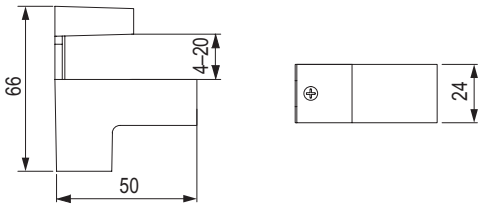

Quad 2

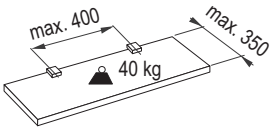

code	finish
15572	satin chrome

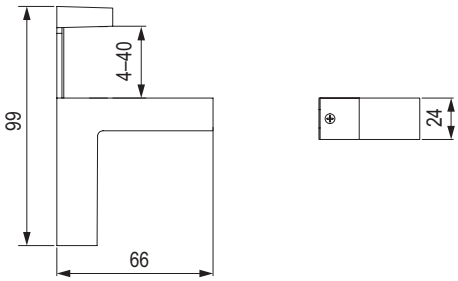

concealed shelf holders

Concealed shelf holders

36115

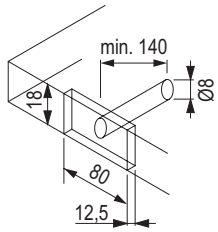

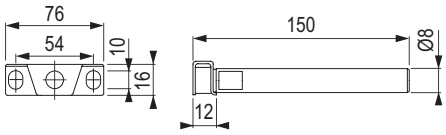

36116

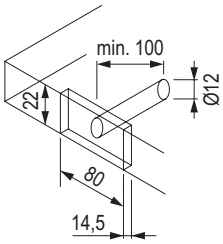

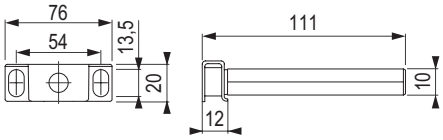

code	use
36115	for shelves with a minimum thickness of 19 mm
36116	for shelves with a minimum thickness of 24 mm

Concealed shelf support, 10 mm

code	length L (mm)
15651	100

- recommended pitch: 450–500 mm

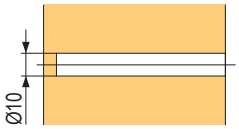

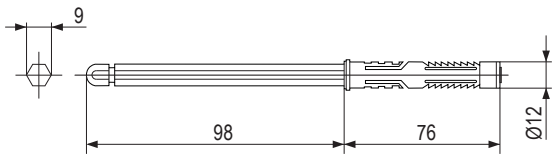

Concealed shelf support, 14 mm

code	length L (mm)	drilling depth in shelf D (mm)	possibility of adjustment
161868	120	120	NO
161865	140	140	
161869	165	165	
507063	145	150	3D +- 2 mm

- recommended pitch for shelf mounting: 450–500 mm

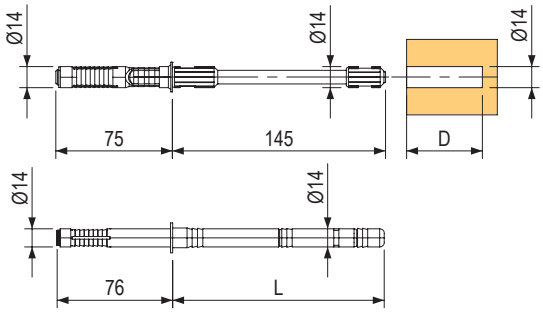

concealed shelf holders

Triade system

- concealed construction system for independent shelves with a possibility of a three-way adjustment
- available versions:
  - Triade Mini, min. shelf thickness: 25 mm
  - Triade, shelf thickness: 25–40 mm
  - Triade Maxi, min. shelf thickness: 40 mm
  - Triade XXL, for honeycomb shelves, min. shelf thickness: 40 mm
- adjustable in three directions:
  - vertical: for perfect alignment of the holders on the wall
  - side: the possibility of lateral shift ensures easy installation even when drilling off the exact axis
  - tilt adjustment: ensures a straight shelf even on uneven wall, with the help of a wrench it is possible to adjust even a partially installed shelf – setting is visible immediately
- high load capacity
- supports that increase load capacity of Triade for materials with lower bearing capacity are available for all types
- use of support is recommended to achieve full load capacity
- material: zinc-steel alloy
- **the possibility of using a security locking to prevent the shelf from sliding out**

Installation

for wood

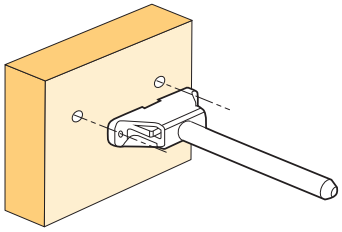

wall/plasterboard

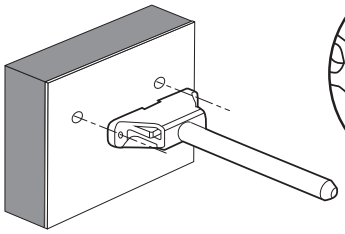

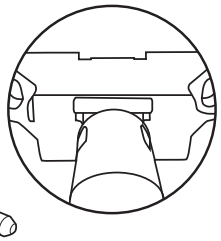

vertical adjustment
aligning multiple holders to one plane

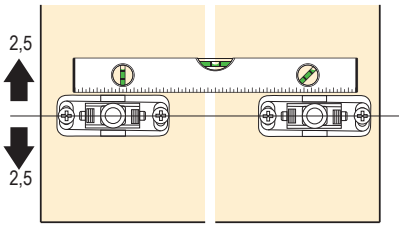

recommended screws with button head, max. diameter 5 mm

Important: install only with the arrow up!

shelf insertion and side adjustment
lateral adjustment of the shelf (for example, when placing multiple shelves side by side)

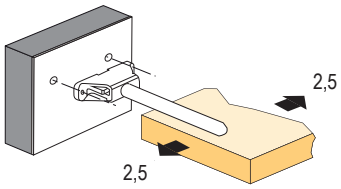

tilt adjustment
rotate the wrench clockwise

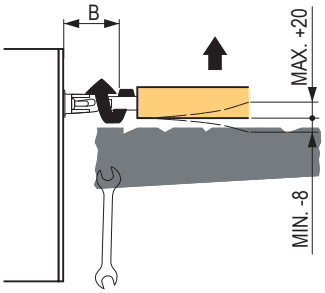

model	offset from the wall (β) (mm)	(mm)
Triade Mini	approximately 45	-6
		+13
Triade	approximately 45	-6
		+13
Triade Maxi	approximately 70	-8
		+20
Triade XXL	approximately 70	-8
		+20

screw the safety screw to fix the holder

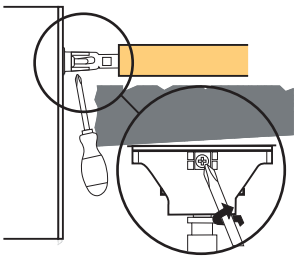

secure the shelf on the pin with a grub screw

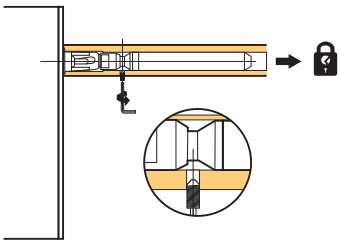

Concealed shelf holder – Triade Pro Mini

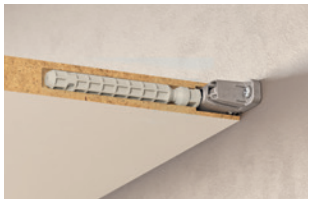

code	use
507077	for shelves with a minimal thickness of 25 mm

- enables adjustment in three directions – shelf can be adjusted vertically, horizontally and tilted as necessary

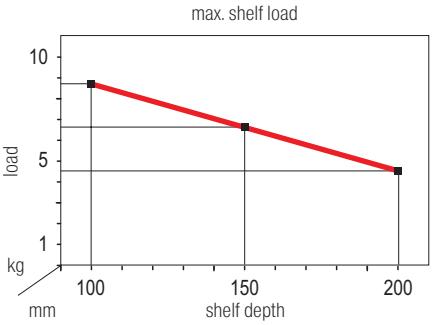

Declared load applies only when the relevant support is used and the shelf load capacity is sufficient. The manufacturer is not responsible for damage caused by improper installation, poor underlayment, defective shelf, etc.

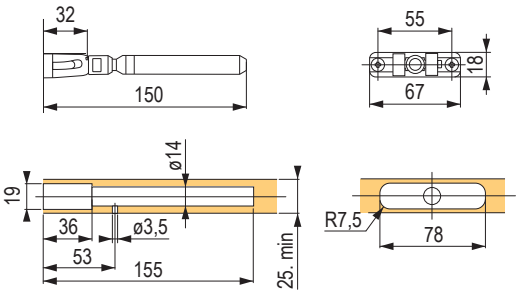

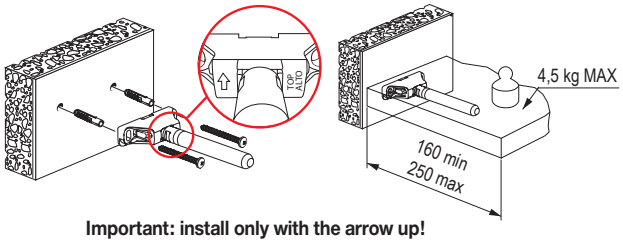

Important: install only with the arrow up!

Support for Triade Pro Mini

code	use
337998	support for Triade Pro Mini holder + screws M5 × 12

- ensures firmer connection to the wall
- this accessory is optional

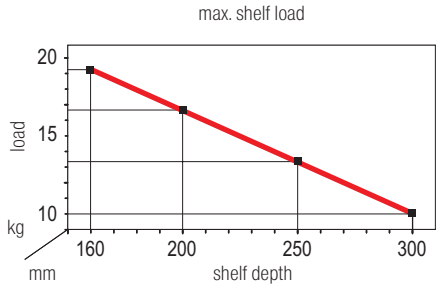

Declared load applies only when the relevant support is used and the shelf load capacity is sufficient. The manufacturer is not responsible for damage caused by improper installation, poor underlayment, defective shelf, etc.

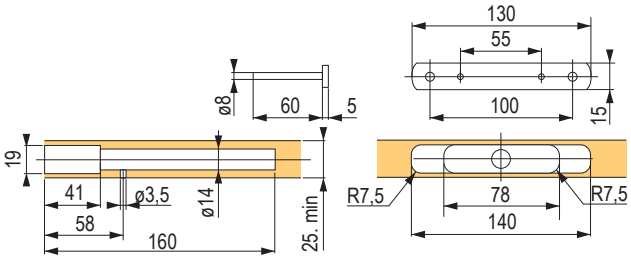

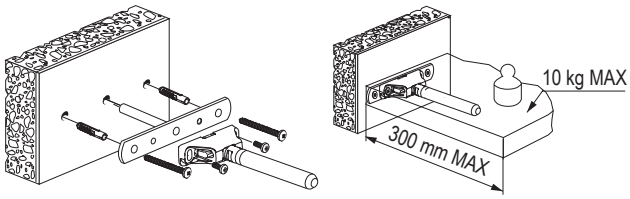

concealed shelf holders

Concealed shelf holder – Triade Pro

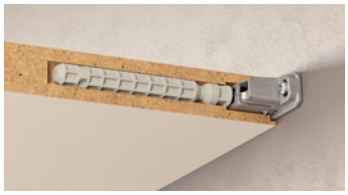

code	use
507078	for shelves with a minimum thickness of 25 mm

- enables adjustment in three directions – shelf can be adjusted vertically, horizontally and tilted as necessary

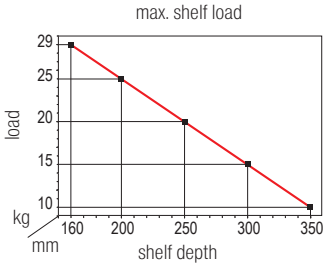

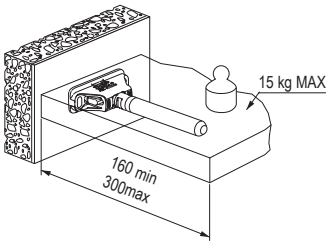

Declared load applies only when the relevant support is used and the shelf load capacity is sufficient. The manufacturer is not responsible for damage caused by improper installation, poor underlayment, defective shelf, etc.

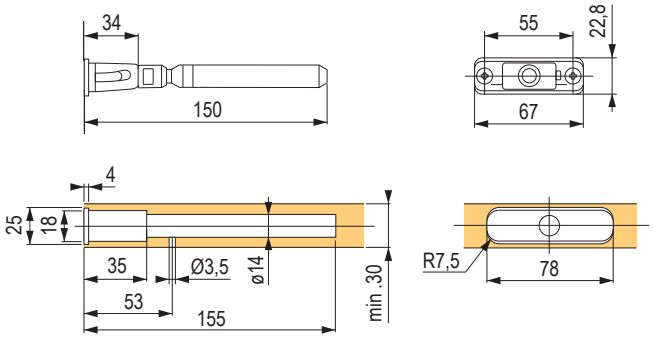

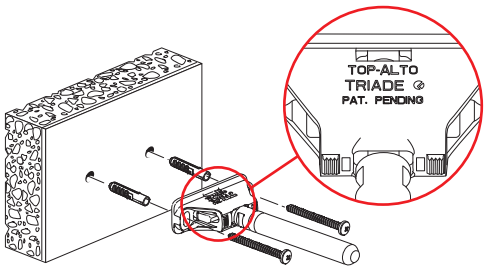

Important: install only with the arrow up!

Support for Triade Pro

code	use
15579	support for Triade Pro holder + screws M5 × 12

- ensures firmer connection to the wall
- this accessory is optional

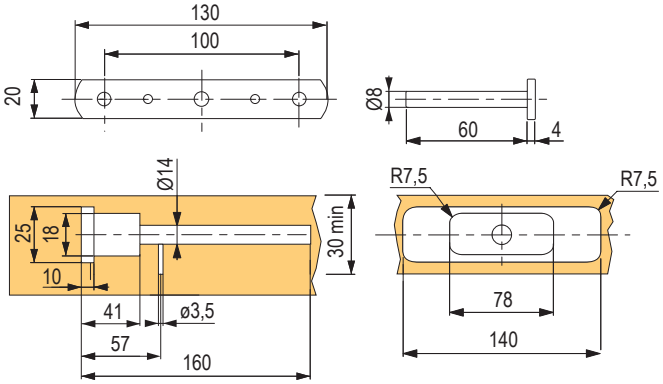

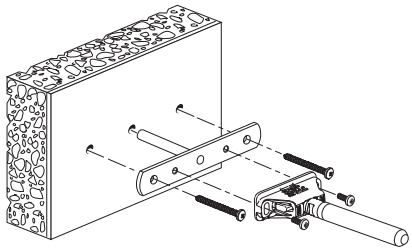

Concealed shelf holder – Triade Pro Maxi

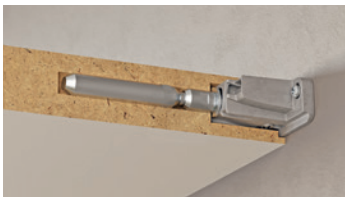

code	use
507079	for shelves with a minimum thickness of 40 mm and depth of 200 mm

- enables adjustment in three directions – shelf can be adjusted vertically, horizontally and tilted as necessary

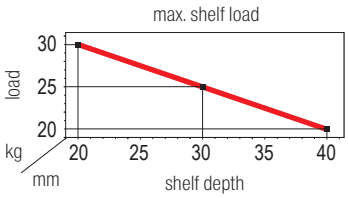

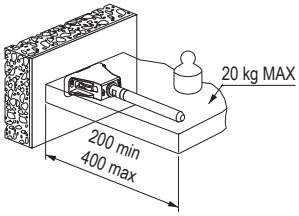

Declared load applies only when the relevant support is used and the shelf load capacity is sufficient. The manufacturer is not responsible for damage caused by improper installation, poor underlayment, defective shelf, etc.

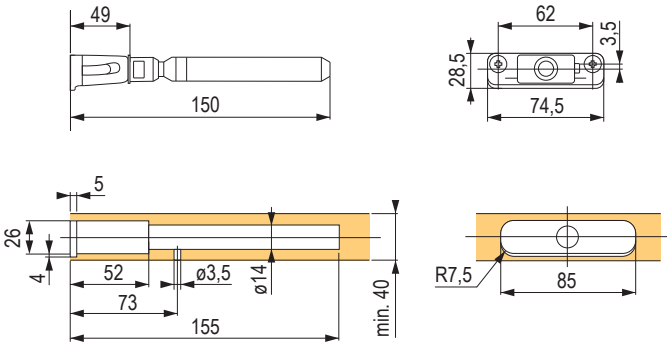

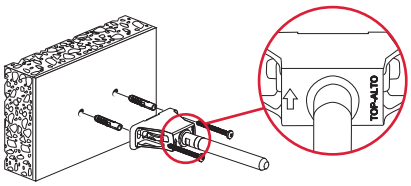

Important: install only with the arrow up!

Support – Triade Pro Maxi

code	use
352036	support for Triade Maxi holder + screws M5 × 12

- ensures firmer connection to the wall
- this accessory is optional

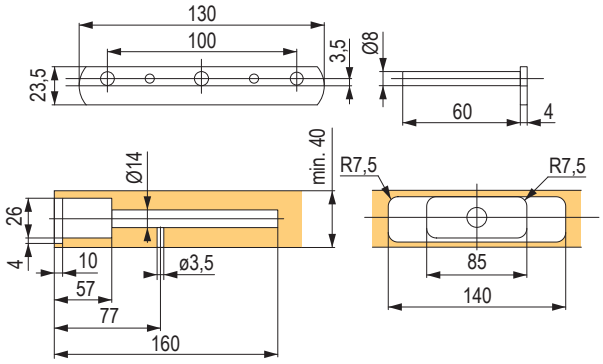

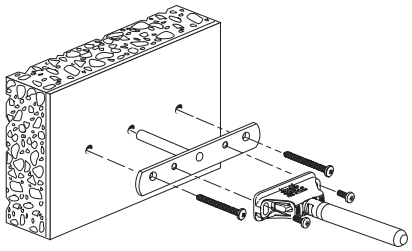

concealed shelf holders

Concealed shelf holder – Triade Pro XXL

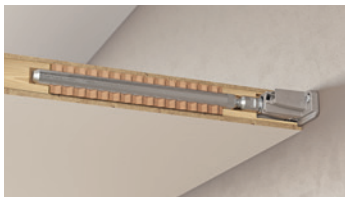

code	use
507080	for shelves with a minimum thickness of 40 mm and depth of 300 mm

- enables adjustment in three directions – shelf can be adjusted vertically, horizontally and tilted as necessary
- suitable for solid wood shelves, can also be installed in honeycomb boards

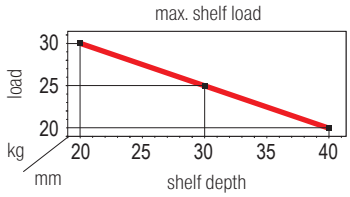

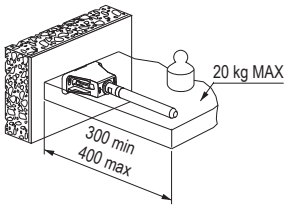

Declared load applies only when the relevant support is used and the shelf load capacity is sufficient. The manufacturer is not responsible for damage caused by improper installation, poor underlayment, defective shelf, etc.

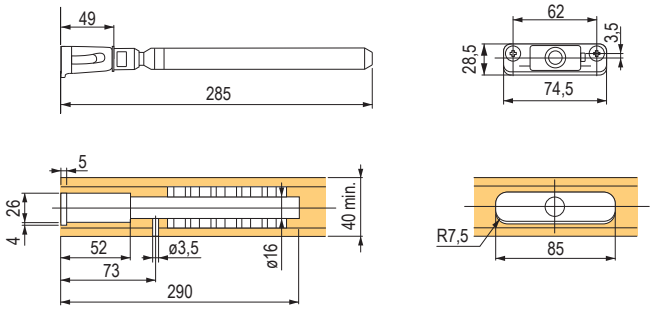

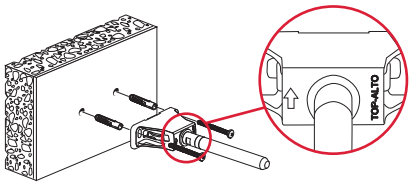

Important: install only with the arrow up!

Support – Triade Pro XXL

code	use
352036	support for Triade XXL holder + screws M5 × 12

- ensures firmer connection to the wall
- this accessory is optional

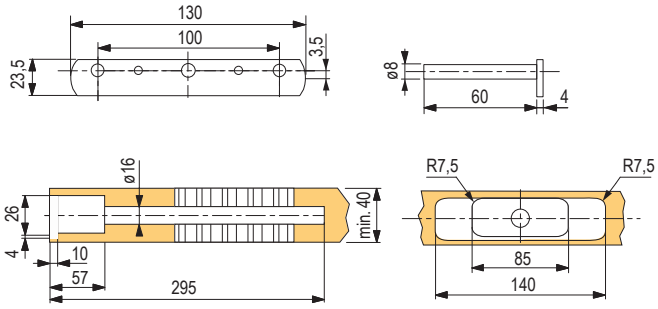

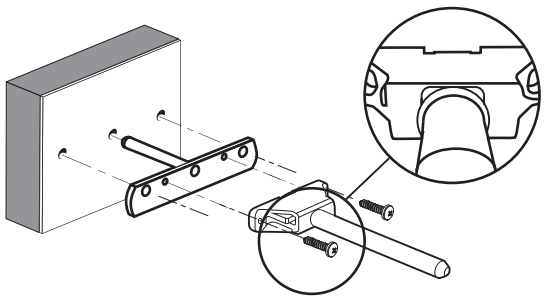

Triade profiles

283326

283325

- for mounting concealed shelf holders on plasterboard walls and other walls with low load capacity
- the profile is fastened to the bearing wall elements
- 2 versions for all types of Triade holders
- connecting bolts and nuts must also be ordered

code	description
283326	Triade Mini and standard
283325	Triade Maxi and XXL

- profile length 2.4 m

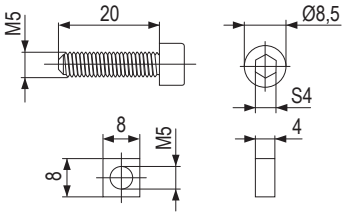

code	description
284344	mounting bolt with a nut, 4 pcs

- set for 2 holders

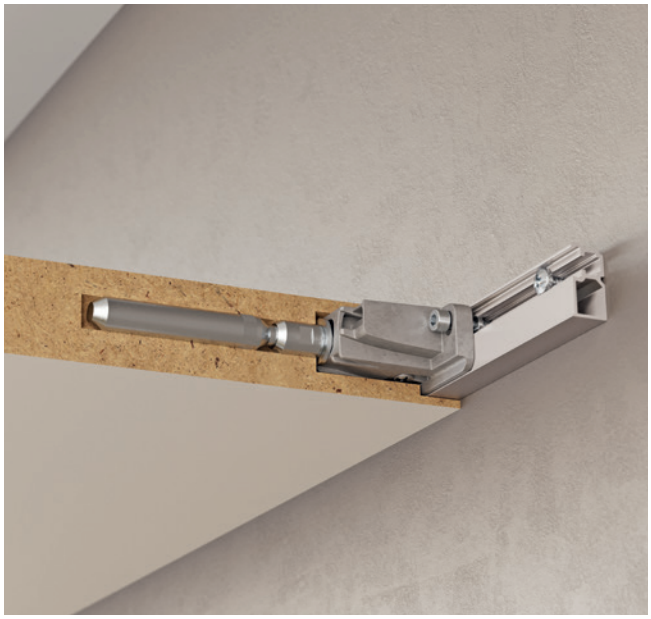

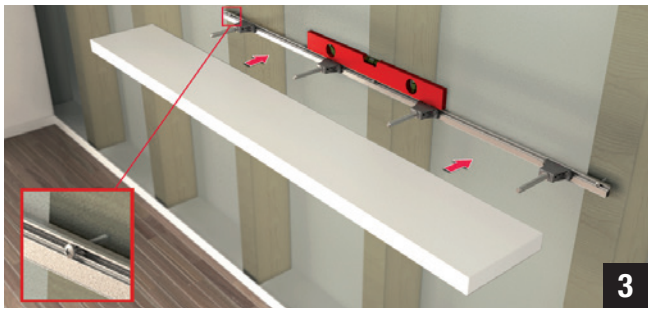

TRIADE MINI

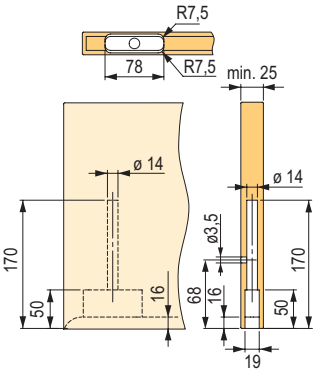

TRIADE

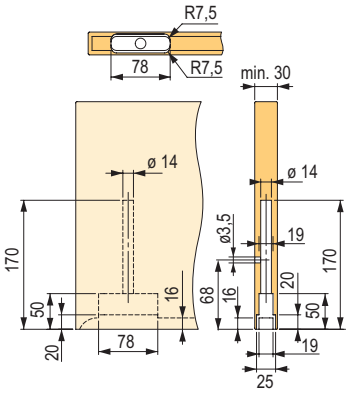

283326

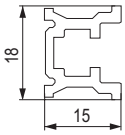

TRIADE MAXI

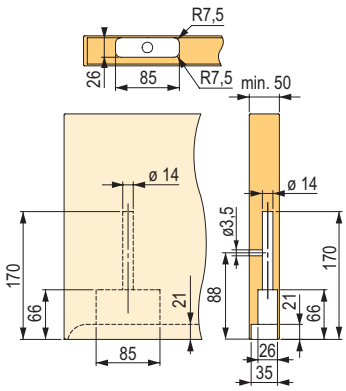

TRIADE XXL

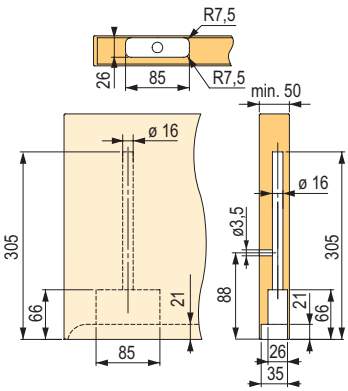

283325

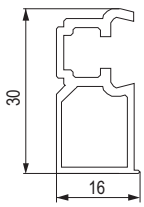

concealed shelf holders

Milling for the Triade Pro system

- installation is possible by milling on CNC machines and subsequent connecting of two parts

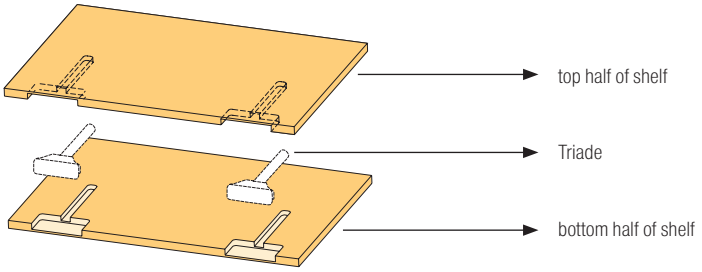

	top part – milling	bottom part – milling
Triade Pro Mini	both halves the same	
Triade Pro	both halves the same	
Triade Pro Maxi		
Triade Pro XXL		

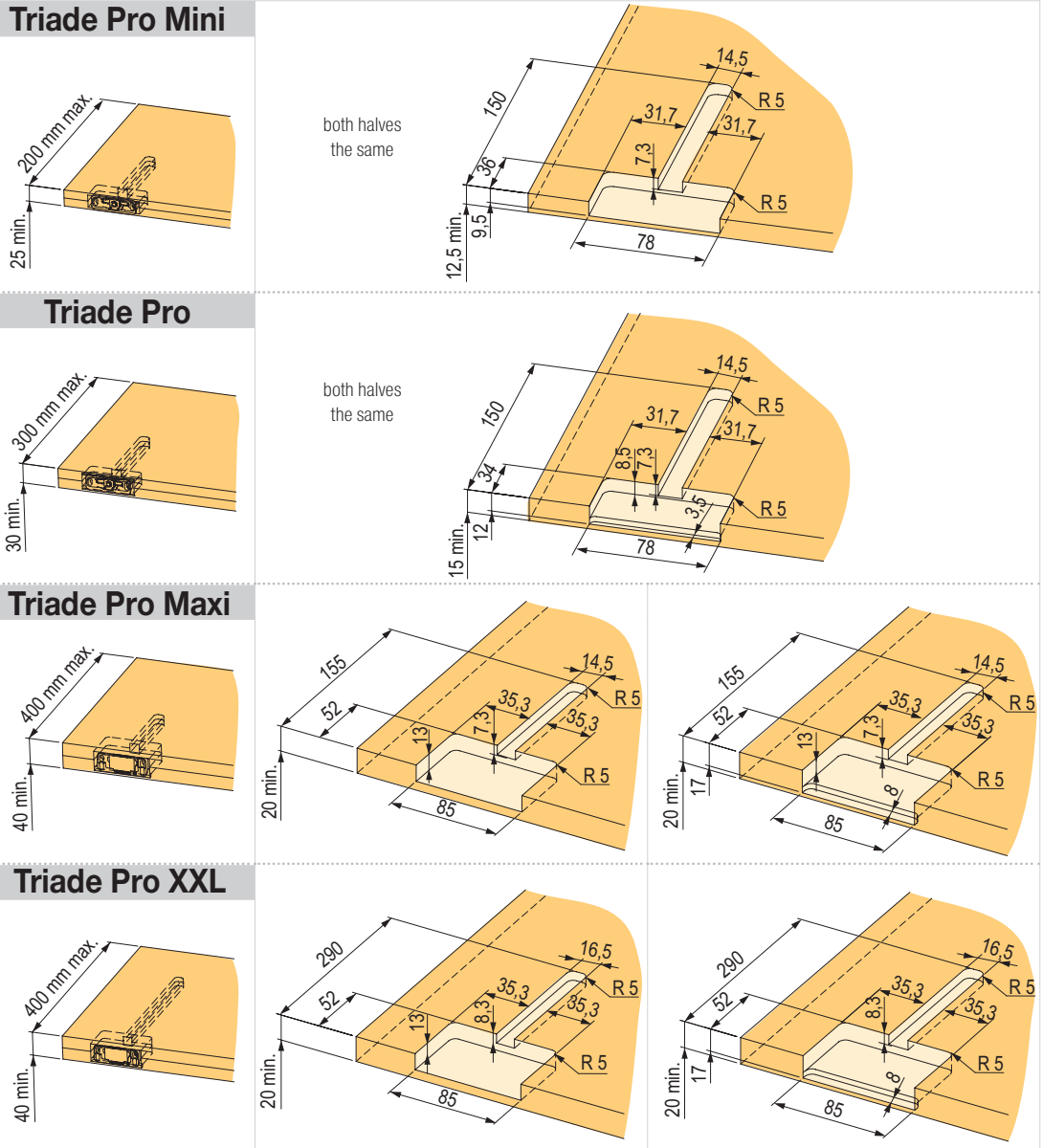

- drawings for milling using TRIADE profiles are available for download at www.demos-trade.com

brackets

Bracket

code	load capacity – pair (kg)	dimension A (mm)	dimension B (mm)	colour
10772	40	100	125	white
10773	40	125	150	white
10774	50	150	200	white
10775	50	200	250	white
10776	60	250	300	white
10777	70	300	350	white
10778	40	100	125	brown
10779	40	125	150	brown
10781	50	200	250	brown
10782	50	250	300	brown
10783	60	150	200	brown
10784	70	300	350	brown

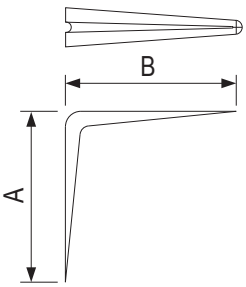

Folding bracket

code	height (mm)	depth (mm)	colour
303071	264	300	white
303073	304	400	white
303072	264	300	black
303074	304	400	black
347818	264	300	satin
347819	304	400	satin

- load capacity 100 kg (when using 2 brackets per board with a width of 600 mm)
- ideal for folding shelves, small dining tables, bars
- white, black and satin colour are comaxit
- the distance of the shelf from the wall when the bracket is fully tilted is 30 mm

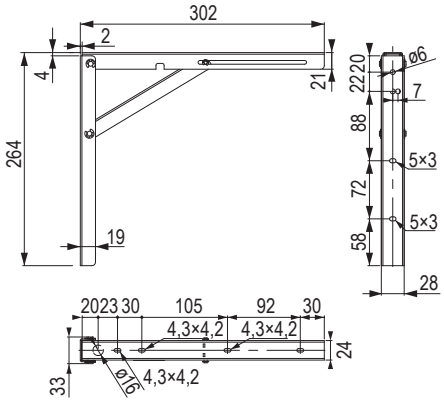

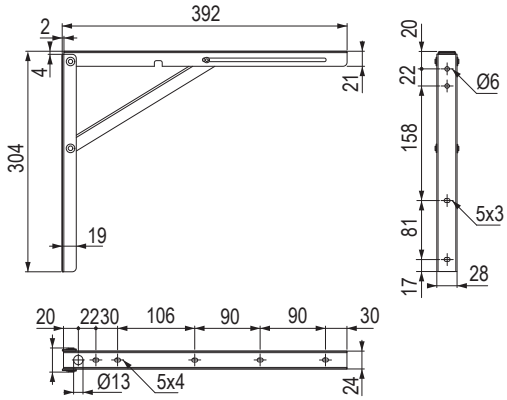

metal connecting angled brackets and plates

Angled bracket

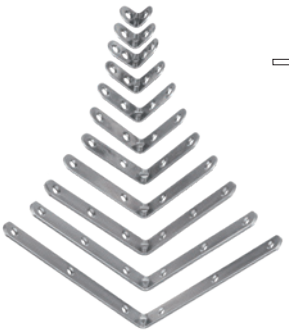

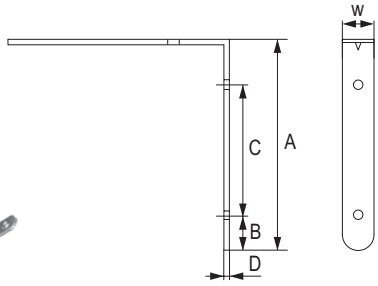

code	dimensions				
	A (mm)	B (mm)	C (mm)	D (mm)	W (mm)
92150	15	7,5	×	1,5	15
92151	20	10	×	1,5	15
92152	25	7,5	9,5	1,5	15
92153	30	7,5	14	1,5	15
92154	40	7	19	1,5	15
92155	50	9	27	1,5	15
92156	60	9	31	2	15
92157	80	9	51	2	15
92158	100	10	35	3	15
92159	120	10	45	3	15
92149	150	10	60	3	15

- hole diameter is 7/5 mm, recommended screw size: 3–3.5 mm

Corner connecting plate

code	dimensions
100216	50 × 41 × 32 mm

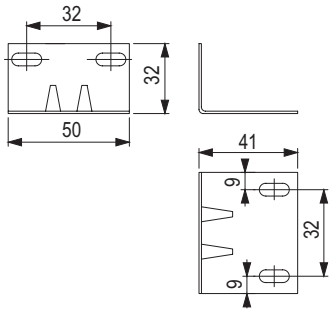

Connecting sheet metal

code	dimensions
100226	60 × 15 × 2 mm
100227	100 × 15 × 2 mm
100228	140 × 15 × 2 mm

- hole diameter is 7/5 mm, recommended screw size: 3–3.5 mm

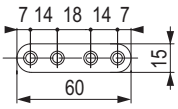

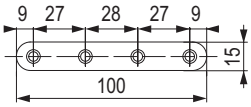

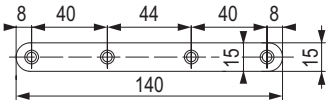

Connecting sheet metal

code	dimensions
153416	100 × 50 × 3 mm

- hole diameter is 10/5 mm, recommended screw size: 3.5–5 mm

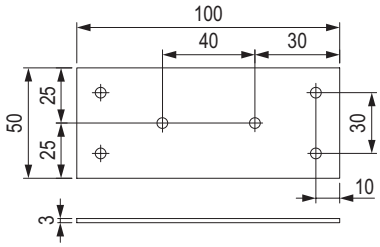

connecting plates and fittings for beds can be found in chapter 15

plastic connecting angled brackets

Metal bracket with a plastic cover cap

279271

279272

279273

279274

279275

337926

code	colour	package (pcs)
279271	white	50
279272	dark brown	
279273	beech	
279274	black	
279275	birch	
337926	light grey	

- meets the EN 14749:2007 standard
- load capacity per 4 pcs up to 100 kg (depending on the strength of the shelf and cabinet body)

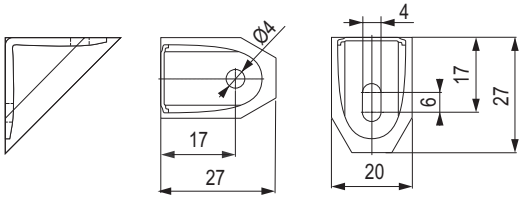

Small connecting angled bracket

491141

491140

491143

491142

491144

491138

code	colour
491141	brown
491140	black
491143	white
491142	beech
491144	cherry
491138	birch

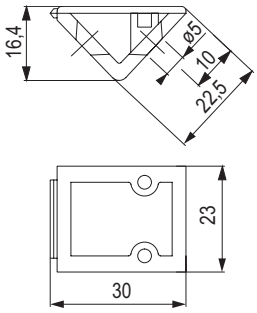

Large connecting angled bracket

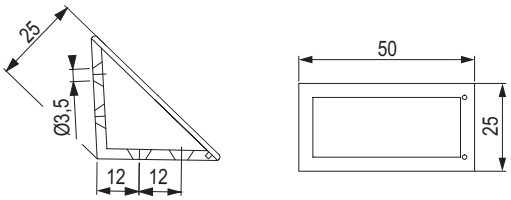

491150

491147

491149

491153

491152

491151

491146

491148

code	colour
491150	brown
491147	black
491149	light grey
491153	white
491152	beech
491151	cherry
491146	birch
491148	pine

plastic connecting angled brackets

Double connecting angled bracket, 42 mm

code	colour
100223	cherry
100225	alder
100224	apple
100220	stained oak
204156	light oak
100219	black
100221	beech
204162	grey
129729	birch
100222	pine
100218	white
101413	ash
205433	transparent milky

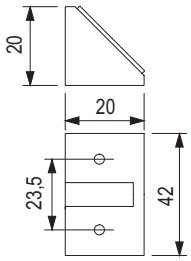

Fastening component

code	colour
11549	brown
11550	white
11551	black
11613	beech

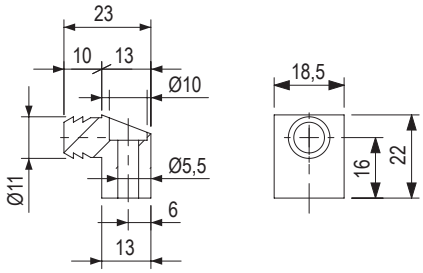

Connecting angled bracket

code	colour
11615	transparent
507084	white
507085	grey
507086	black

- with a pre-installed screw

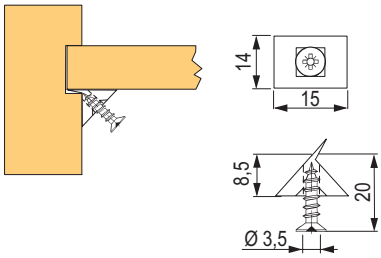

Magnet for drilling-in – K Lock

347130 229141 347131

code	colour
347130	white
229141	grey
347131	anthracite

- for drilling-in, 10 × 27 mm
- possibility of door offset regulation by 3.5 mm

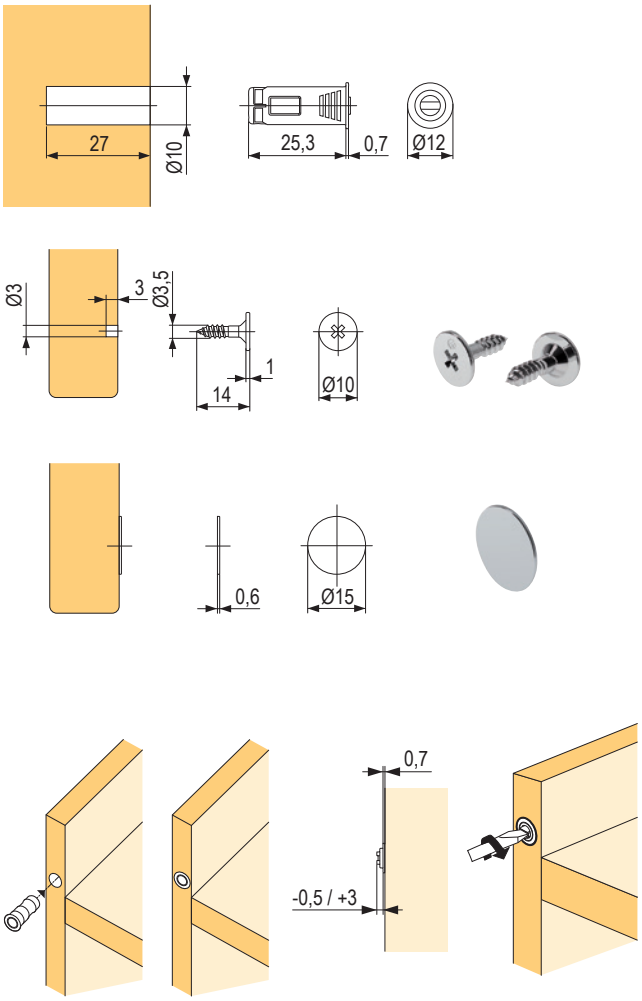

Adapter housing for K Lock

code	colour
347134	white
293114	grey
347135	anthracite

- for surface mounting of the magnet
- material – plastic

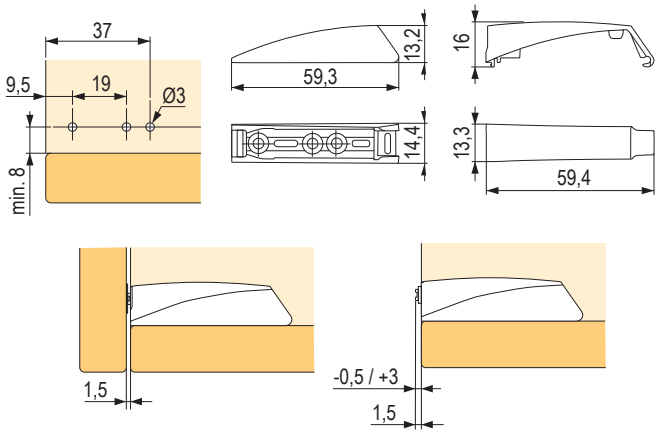

Furniture magnet

code	colour
11514	black
11519	brown
11520	white
405415	oak

- force: 4 kg

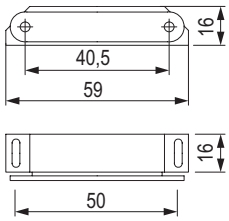

other plastic fittings and accessories

Snap-off wedge

code	colour
100244	transparent

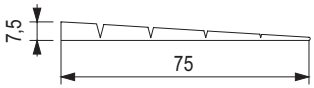

Door stopper

code	colour
11569	white
11570	brown
11571	black
11622	beech
101206	grey

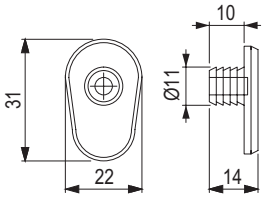

Glass holder

code	colour
11605	white
11606	brown
195442	transparent

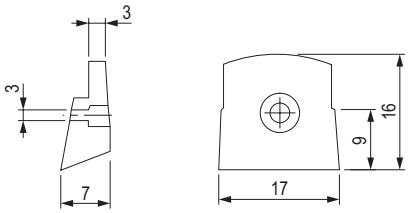

Self adhesive door buffer

code	size (mm)	shape	quantity per sheet (pcs)
78950	8 × 1,6	round	50
279340	10 × 3		
279335	11 × 5		55
279336	10 × 10 × 2,5	square	
279338	12,5 × 12,5 × 5,8		40
350356	13 × 4	round	

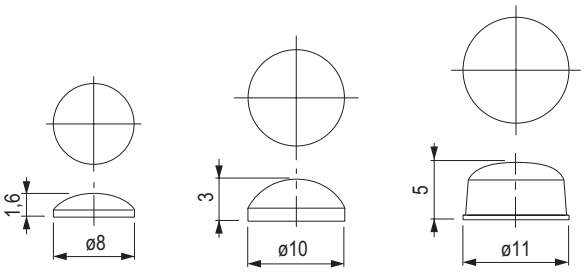

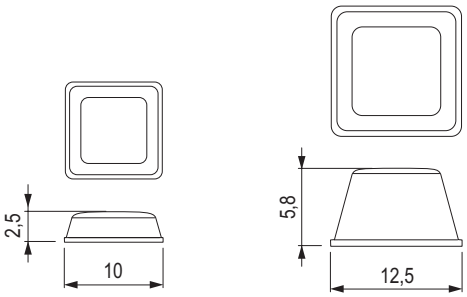

Door buffer for drilling-in

code	colour
78964	transparent

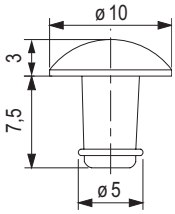

other plastic fittings and accessories

Door buffer – BI-Material

code	name	drilling (mm)	damping part dimensions
229142	BI-Material transparent	5 mm	8,8 × 2,5 mm
507087	BI-Material white		
507088	BI-Material anthracite		
507089	BI-Material grey		
507090	BI-Material brown		
279341	Soft transparent	10 mm	14 × 3,5 mm

- buffer for drilling-in, two-material design allows easy installation
- suitable also for machine assembly
- material: transparent plastic

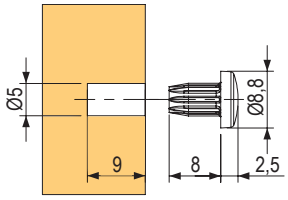

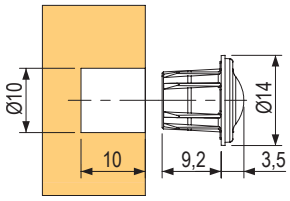

Door buffer – FLEX

code	colour	drilling (mm)
507091	grey	5
507092	anthracite	
283318	grey plastic + transparent	8

- buffer for drilling-in
- contains silicone
- soft closing material designed for intense shock absorbing
- suitable also for machine assembly

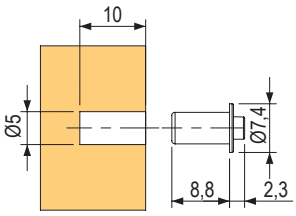

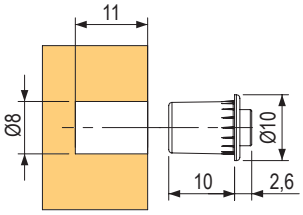

other plastic fittings and accessories

Fixing joint – Connect

code	description
283328	for drawer fronts, reinforcement of parts

- for screw with a countersunk head screw, diameter: 3.5 mm

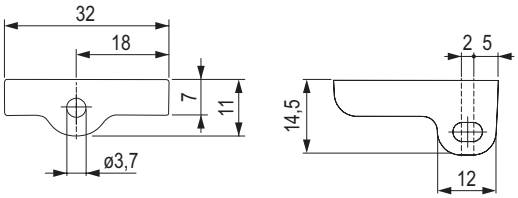

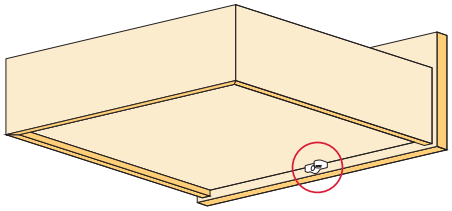

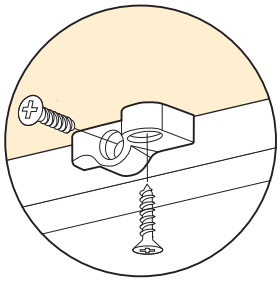

Rear connecting profile (2 m)

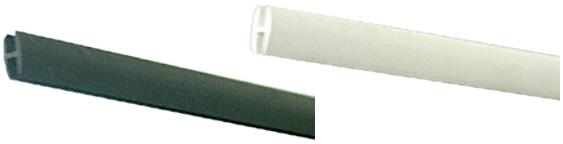

code	colour
205357	black
205355	white
205356	beech

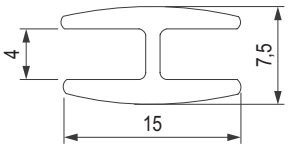

Fittings for dual-side refrigerator opening

code	colour
82785	white

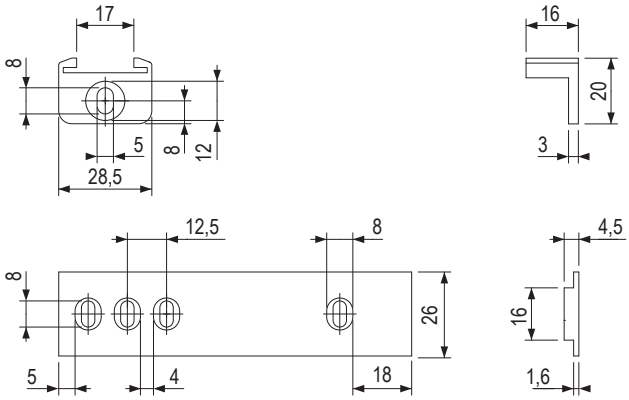

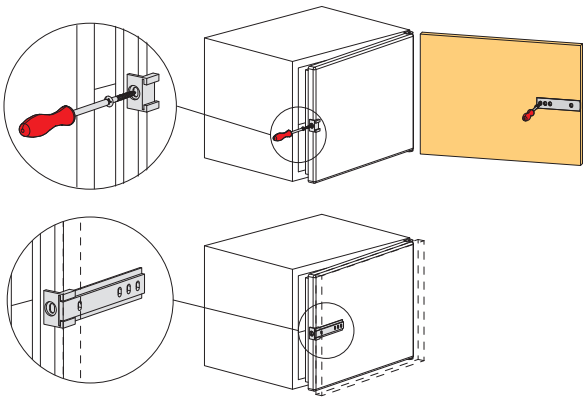

cams, dowels and sockets

Eccentric cam connecting fittings – Rastex 15

- design solution facilitates assembly – this allows the sides to be clamped up to 4 mm from the front edge of the furniture component
- the rim covers the edges of drillings, making an additional cover cap unnecessary
- to be used for furniture components with a thickness of 15, 16 and 18 mm
- zinc casting

For components with a thickness of 15 mm

code	Hettich code	finish	package (pcs)
104406	79457	nickel-coated	200

- without a rim

For components with a thickness of 16 mm

code	Hettich code	finish	package (pcs)
104410	25062	nickel-coated	200

- without a rim

For components with a thickness of 18 mm

code	Hettich code	finish	package (pcs)
103766	13957	nickel-coated	200
103765	13958		2000
104414	13961	no surface treatment	200
104417	13962		2000

- without a rim

Plastic cover caps for Rastex 15

code	Hettich code	finish	package (pcs)
105428	71054	white	200
105430	71055	brown	
105429	79490	black	
105427	79491	pine	

- without a rim

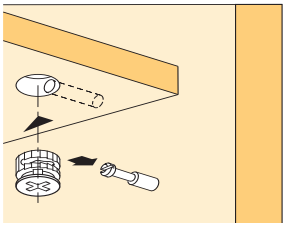

Fast installation dowel Rapid S DU 325

code	Hettich code	package (pcs)
105070	47458	200

- expanding socket for 8 mm drilling diameter
- fastening dimension: 30 mm
- steel and blue plastic

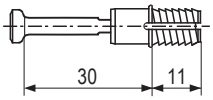

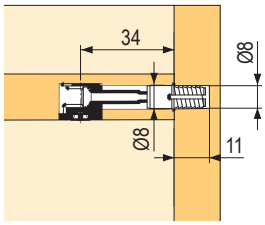

Screw-in dowel Twister DU 320

code	Hettich code	package (pcs)
107959	48038	200

- for Rastex 15
- euro thread, for 5 mm drilling diameter
- fastening dimension: 30 mm
- galvanised steel, black plastic

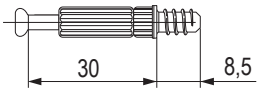

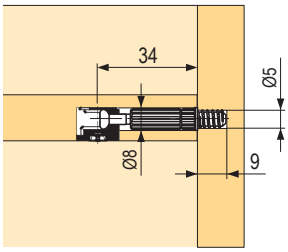

Screw-in dowel Twister DU 644

code	Hettich code	package (pcs)
105082	20157	200

- for Rastex 15
- thread M6 × 7.8 mm
- fastening dimension: 30 mm
- galvanised steel, black plastic

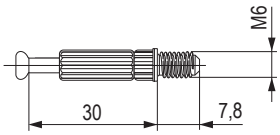

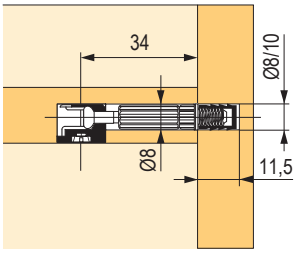

Screw-in dowel Twister DU 232

code	Hettich code	package (pcs)
107955	20058	200

- euro thread, for 5 mm drilling diameter
- fastening dimension: 30 mm
- galvanised steel, black plastic

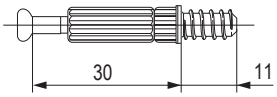

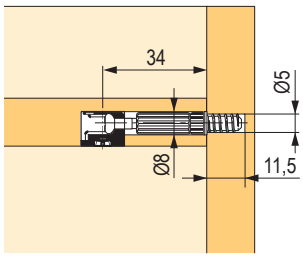

Screw-in dowel Twister DU 243

code	Hettich code	package (pcs)
107956	20056	200

- fastening dimension: 20 mm
- galvanised steel, green plastic

Socket no. 49

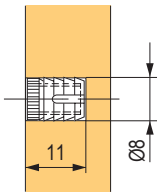

code	Hettich code	package (pcs)
106614	40005	200

- for M6 thread
- drilling diameter: 8 mm
- white plastic

Double dowel – DU 853

code	Hettich code	package (pcs)
105053	79568	100

- for 19 mm centre panel
- with Seeger circlip ring
- drilling diameter: 8 mm
- chrome plated steel

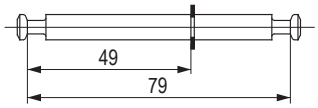

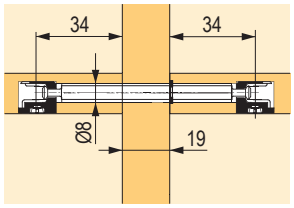

Angle dowel – DU 860

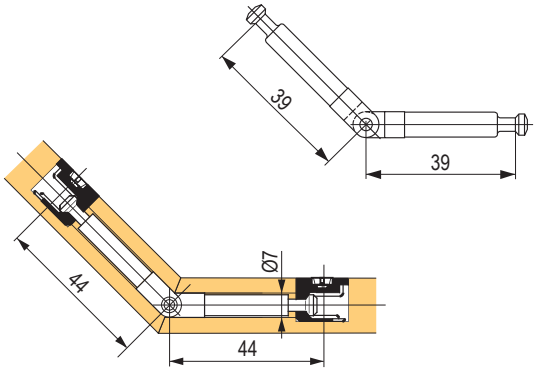

code	Hettich code	package (pcs)
105061	79580	100

- usable from 90 to 180°
- drilling diameter: 7 mm
- chrome plated steel

Eccentric cam connecting fittings – Rastex 25

- high safety thanks to inner and outer notches
- notches prevent cam from spontaneous loosening
- the torque necessary for loosening is three times higher than that for a comparable cam fittings
- zinc casting

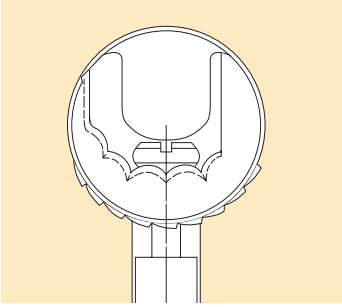

Rastex 25 without a rim

code	Hettich code	description
104443	13116	no surface treatment, 200 pcs in package

- without a rim

diagram of drilling the furniture component

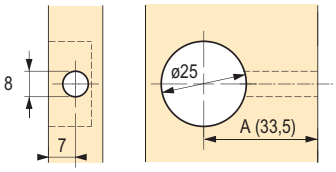

dowel axis from bottom part

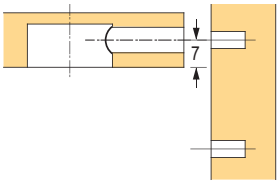

drilling diagram
A = fastening dimension + 9 mm

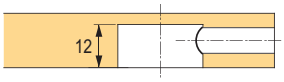

Screw-in dowel Twister DU 262

code	Hettich code	description
105076	20060	200 pcs in package

- for Rastex 25
- euro thread, for 5 mm drilling diameter
- fastening dimension: 24.5 mm
- galvanised steel / blue plastic

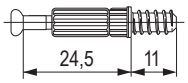

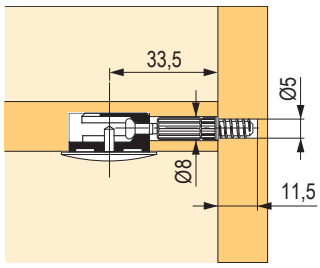

Eccentric cam connecting fittings – VB 35

- decorative connecting fittings for shape-stable connections on the well-tried cam principle
- fittings are pressed into a drilled hole with a 20 mm diameter
- furniture component is mounted from the top or front
- in case of a base, the cam can be tightened also from the top – for this, it is necessary to drill a hole through the bottom

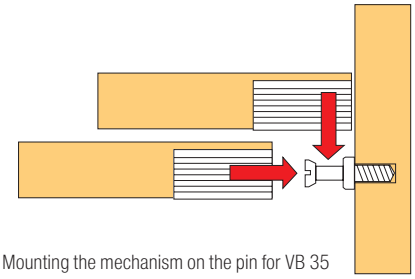

Mounting the mechanism on the pin for VB 35

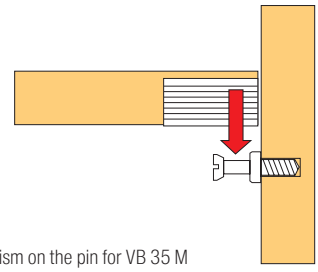

Mounting the mechanism on the pin for VB 35 M

VB 35/16 for 16 mm shelves

code	Hettich code	description
104468	65509	zinc casting, nickel-coated, 200 pcs in package

VB 35/19 for 19 mm shelves

104478	65513	zinc casting, nickel-coated, 200 pcs in package
104465	65515	plastic, white, 200 pcs in package
104466	65516	plastic, brown, 200 pcs in package

VB 35 M/16 for 16 mm shelves

104500	65501	zinc casting, nickel-coated, 200 pcs in package
104445	65503	plastic, white, 200 pcs in package
104488	65504	plastic, brown, 200 pcs in package

VB 35 M/19 for 19 mm shelves

104501	65505	zinc casting, nickel-coated, 200 pcs in package
104489	65507	plastic, white, 200 pcs in package
464982	9116945	plastic, brown, 1,000 pcs in package
104498	79643	plastic, black, 200 pcs in package

Shelf connectors – VB 135

code	Hettich code	description
104522	73616	plastic, white, 200 pcs in package

- furniture component with VB 135 fitting is connected with a dowel by mere pressing
- since the rim is conical, the furniture component is clamped with a side and is thus secured against falling out

diagram of drilling the furniture component

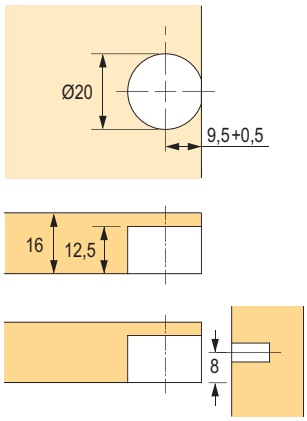

dowel axis from bottom part

diagram of drilling the furniture component

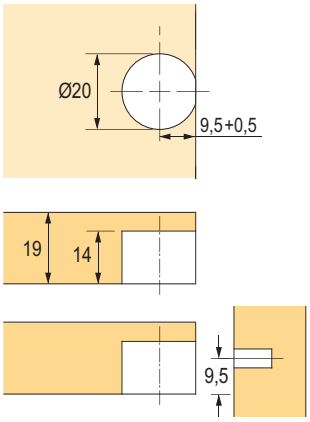

dowel axis from bottom part

Eccentric cam connecting fittings – VB 36

- decorative connecting fittings for shape-stable connections on the well-tried cam principle
- fittings are pressed into drilled holes with a diameter of 20 mm and 10 mm, the furniture component is mounted from the top or front
- allow the sides that are up to 2 mm away from the front edge of the furniture component to be clamped
- in case of a base, the cam can be tightened also from the top – for this, it is necessary to drill a hole through the bottom

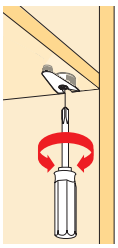

Connecting fittings VB 36/16 for 16 mm shelves

code	Hettich code	description
104538	65525	zinc casting, nickel-coated, 200 pcs in package

Connecting fittings VB 36/19 for 19 mm shelves

code	Hettich code	description
104554	65529	zinc casting, nickel-coated, 200 pcs in package
104507	65531	plastic, white, 200 pcs in package
104503	65532	plastic, brown, 200 pcs in package

mounting the mechanism on the pin for VB 36

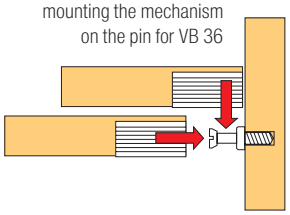

mounting the mechanism on the pin for VB 36 M

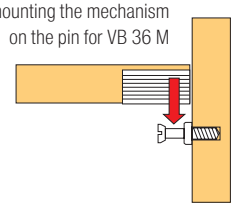

Eccentric cam connecting fittings VB 36 M for 19 mm shelves

code	Hettich code	description
104553	65521	zinc casting, nickel-coated, 200 pcs in package
104545	65523	plastic, white, 200 pcs in package
104546	65524	plastic, brown, 200 pcs in package

diagram of drilling the furniture component

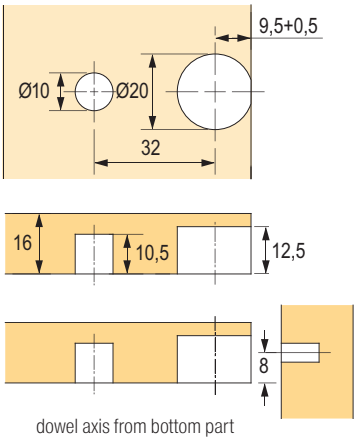

dowel axis from bottom part

diagram of drilling the furniture component

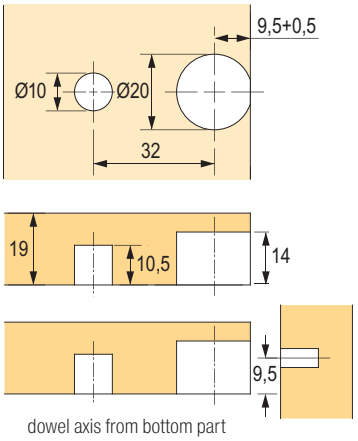

dowel axis from bottom part

Dowel – DU 328 / DU 261

code	Hettich code	description
105023	65540	200 pcs in package

- for VB 35/35 M, VB 36/36 M, VB 135
- euro thread, for 3 mm drilling diameter
- fastening dimension: 6.7 mm
- galvanised steel

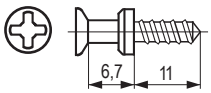

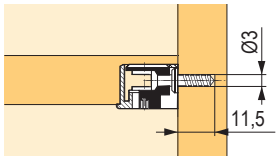

Dowel – DU 322 / DU 260

code	Hettich code	description
105022	64872	200 pcs in package

- for VB 35/35 M, VB 36/36 M, VB 135
- euro thread, for 5 mm drilling diameter
- fastening dimension: 6.7 mm
- galvanised steel

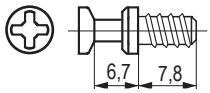

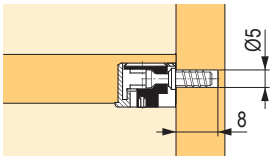

Dowel – DU 321 / DU 279

code	Hettich code	description
104997	74688	200 pcs in package

- only for VB 35/35 M, VB 36/36 M, VB 135
- with high rim
- euro thread, for 5 mm drilling diameter
- fastening dimension: 6.7 mm
- galvanised steel

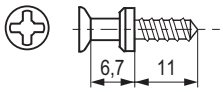

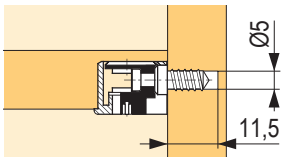

Screw-in dowel – DU 648

code	Hettich code	description
105038	65534	200 pcs in package

- thread M6 × 7.8 mm
- fastening dimension: 6.7 mm
- steel

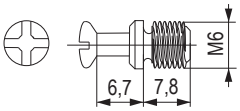

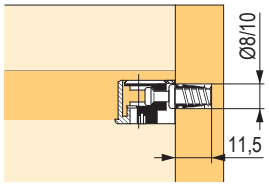

Dowel – DU 426

code	Hettich code	description
105028	65370	200 pcs in package

- for VB 35/35 m, VB 36/36 m, VB 135
- M4 × 7.8 mm thread
- fastening dimension: 6.7 mm
- steel

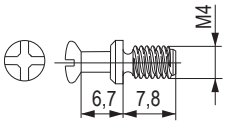

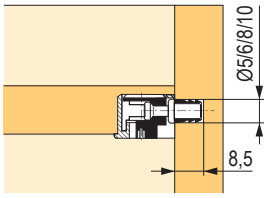

Double dowel – DU 867

code	Hettich code	description
105057	65536	200 pcs in package

- for VB 35/35 m, VB 36/36 m, VB 135
- for 19 mm centre panel
- drilling diameter: 5 mm
- fastening dimension: 6.7 mm
- steel

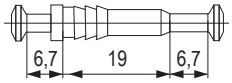

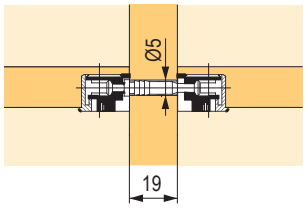

shelf connectors, connecting bolts

AVB 5 connector

code	Hettich code	length (mm)	dimension X (mm)	package
104702	25084	65	30–37	50 pcs
104704	79386	100	48–55	50 pcs
104703	16048	150	73–80	50 pcs

- for shape-stable and firm connection of worktops
- drilling for the housing ø 35 mm
- min. drilling depth: 20 mm
- two rounded clamping plates
- two pre-mounted clips ensure easy installation: they hold the clamping plates and connectors in correct position, permitting easy insertion into drilling or routed recess – while leaving both hands free for bracing
- chrome plated steel

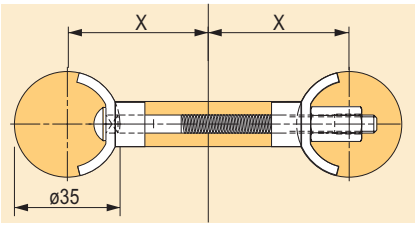

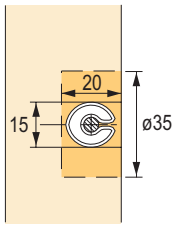

Connecting bolt – VB 25 T

code	Hettich code	description
104752	9079555	50 pcs in package

- integrated 90° gear with internal hexagon socket allows convenient and quick removal with a cordless screwdriver or hexagon wrench No.5
- hole diameter for housing: 25 mm
- housing: zinc casting
- bolt and sleeve: galvanised steel

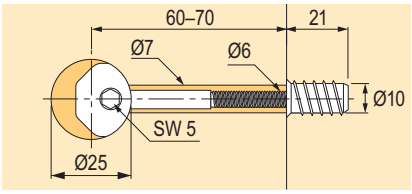

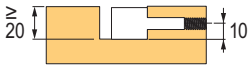

MultiClip cabinet hanger

code	Hettich code	description
104127	46080	200 pcs in package

- only one plastic component is the base of the MultiClip cabinet hanger; this prevents the swap of parts by mistake, minimising the risk of incorrect assembly
- MultiClip has a square cross section and can therefore be mounted from any side
- hole pitch of 32 mm allows it to be used in system 32
- fastening tabs are slightly bent inwards; after suspending, they will clip and thus provide firm connection for suspended parts
- the notched surfaces on the inner sides of fastening tabs strengthen connection and allow greater tolerance during assembly; this also enables adjustment of suspended parts

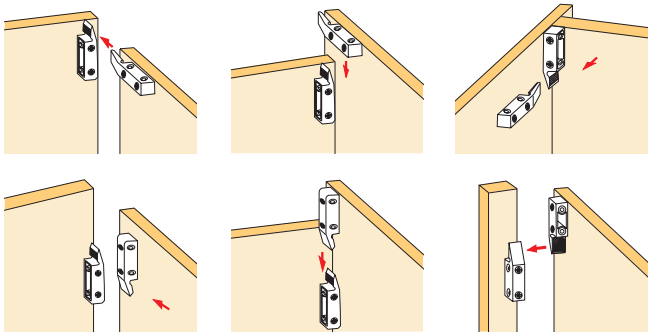

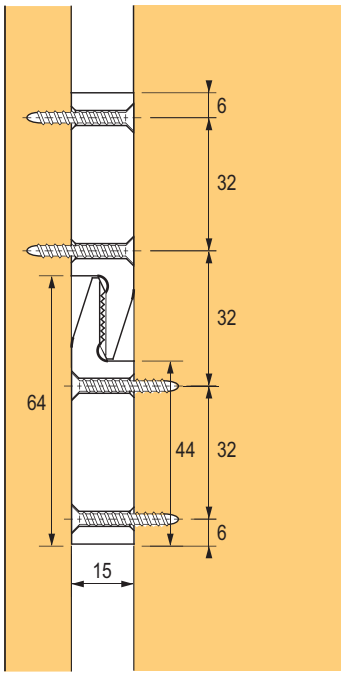

fixing of screws with a countersunk head, diameter 4 mm

shelf connectors, connecting bolts

Mitre joint – VB 160

code	Hettich code	description
104163	47608	100 pcs in package

- for flat door frames or ring profiles
- recess depth only 10 mm
- brown plastic housing

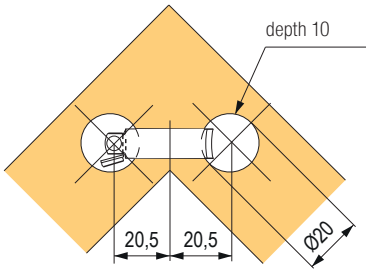

Hinge hook ø 6 × 50 mm

code	Hettich code	description
104630	46103	100 pcs in package

- steel wall plug ø 8 × 40 mm
- plastic

Back connector – RV 1

code	Hettich code	description
103856	19558	100 pcs in package

- nickel-coated zinc casting

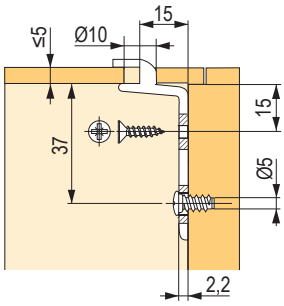

Trapezoidal connecting fittings – TZ 4 STD

code	Hettich code	description
103883	20891	100 pcs in package

- with a pre-mounted screw
- housing: nickel-coated zinc casting
- guide part: steel

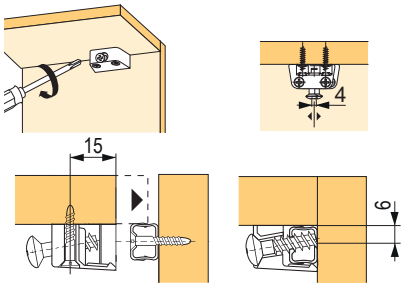

Connecting part for fronts VB 15

code	Hettich code	description
104680	79666	100 pcs in package

- including plastic washer, thickness 2 mm
- galvanised steel

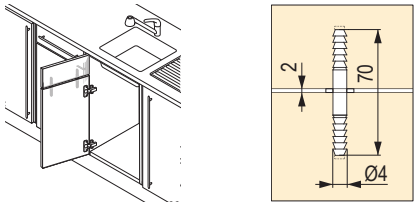

Back connector – RV 7 D

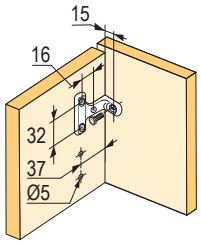

code	Hettich code	description
106759	56614	100 pcs in package

- nickel-coated zinc casting

shelf supports

Shelf support – Sekura 1.1

code	Hettich code	description
106523	19557	500 pcs in package

- pin diameter 5 mm
- 1 safety pin
- nickel-coated zinc casting

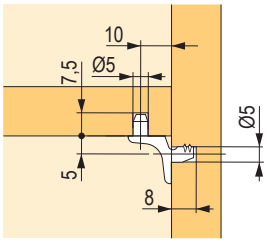

Shelf support – Sekura 6

code	Hettich code	description
106513	79707	500 pcs in package

- pin diameter 5 mm
- 1 additional safety pin
- nickel-coated zinc casting

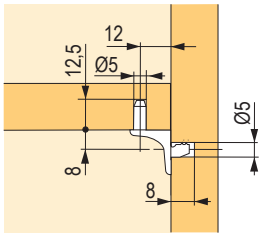

Shelf support – Sekura 2

code	Hettich code	description
106512	25100	500 pcs in package

- pin diameter 5 mm
- nickel-coated zinc casting

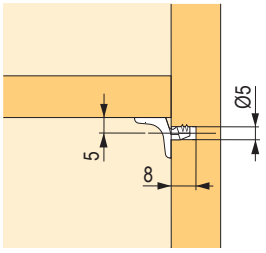

Shelf support – Sekura 7

code	Hettich code	description
106514	53012	500 pcs in package

- hole diameter 5 mm for euro screw, diameter 6.3 mm with countersunk head
- 1 additional safety pin
- nickel-coated zinc casting

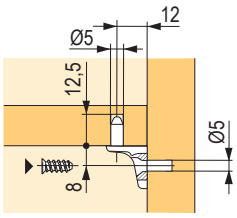

Glass shelf support – Sekura 8

code	Hettich code	description
184626	47609	500 pcs in package

- pin diameter 5 mm
- nickel-coated zinc casting, transparent plastic

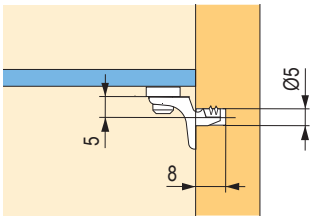

Support – Safety

code	Hettich code	description
106511	16180	500 pcs in package

- steel dowel with clear plastic supporting part

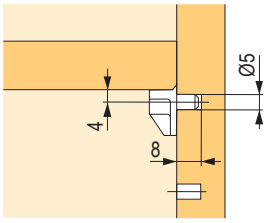

Shelf support – Duplo

code	Hettich code	description
106489	46642	nickel-coated, 500 pcs in package
106491	13138	chrome plated, 500 pcs in package

- steel

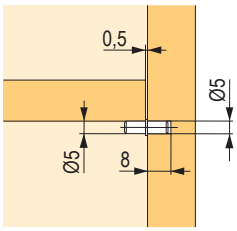

Shelf support with a rim

code	Hettich code	description
106502	16181	500 pcs in package

- chrome plated steel

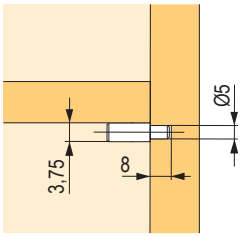

Glass shelf support

code	Hettich code	description
106516	79709	pin diameter 5 mm, 500 pcs in package
106515	79710	pin diameter 3 mm, 500 pcs in package

- with clear plastic cover cap
- soft plastic supporting part eliminates “clacking” of glass shelves
- chrome plated steel pin, transparent plastic

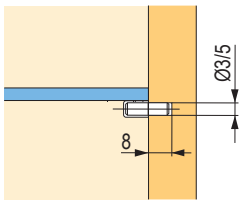

Shelf support 5 × 24 mm

code	Hettich code	description
106488	25124	pin diameter 5 mm, 500 pcs in package

- galvanised steel

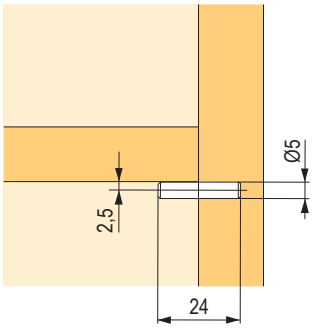

Shelf holders – Titan

code	Hettich code	description
106060	47661	20 pcs in package

- concealed mounting
- max. load including shelf 9 kg with using 2 holders
- bolt: SW 10 mm
- height adjustment: ± 4 mm
- min. shelf thickness: 24 mm
- shelf tilt adjustment
- galvanised steel

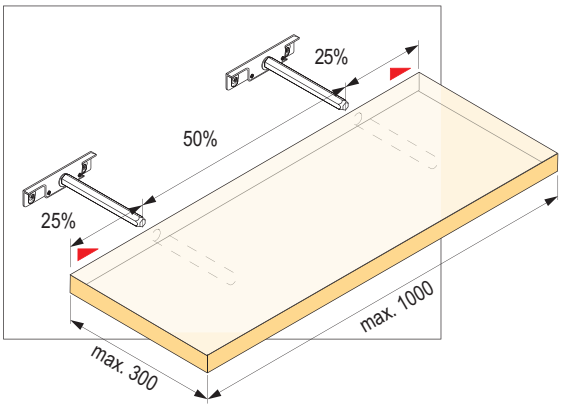

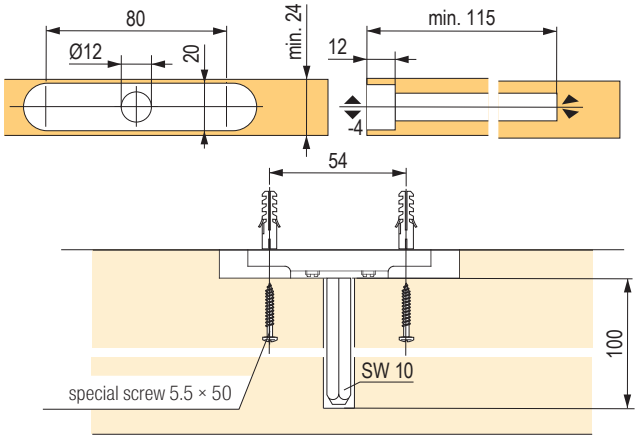

Shelf holders – Titan 1

code	Hettich code	description
106061	79713	20 pcs in package

- concealed mounting
- max. load including shelf 9 kg with using 2 holders
- bolt: SW 10 mm
- height adjustment: ± 4 mm
- side adjustment: ± 4 mm
- min. shelf thickness: 24 mm
- shelf tilt adjustment
- galvanised steel

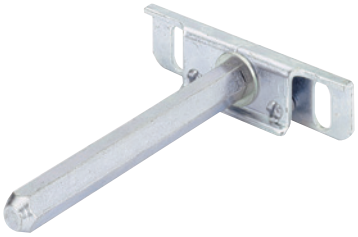

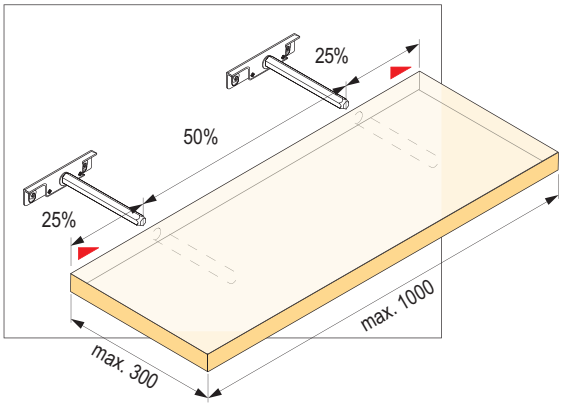

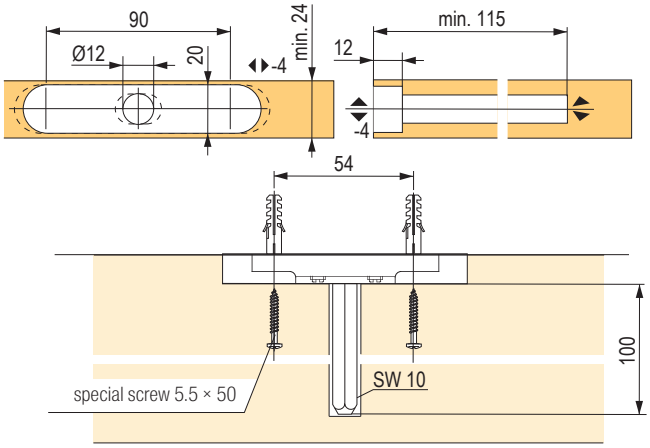

Shelf holders – Titan 2

code	Hettich code	description
106062	63598	20 pcs in package

- concealed mounting
- max. load including shelf 9 kg with using 2 holders
- bearing pin: ø 12 mm
- height adjustment: ± 4 mm
- min. shelf thickness: 24 mm
- shelf tilt adjustment
- galvanised steel

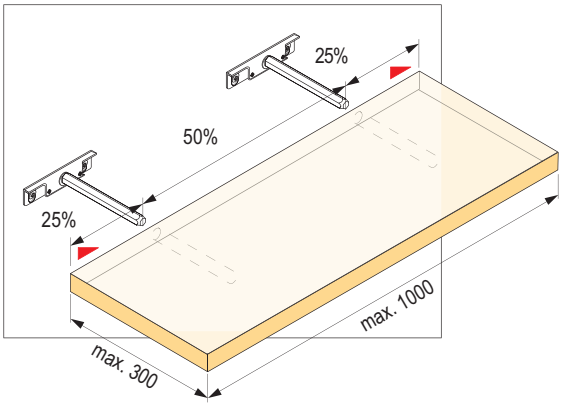

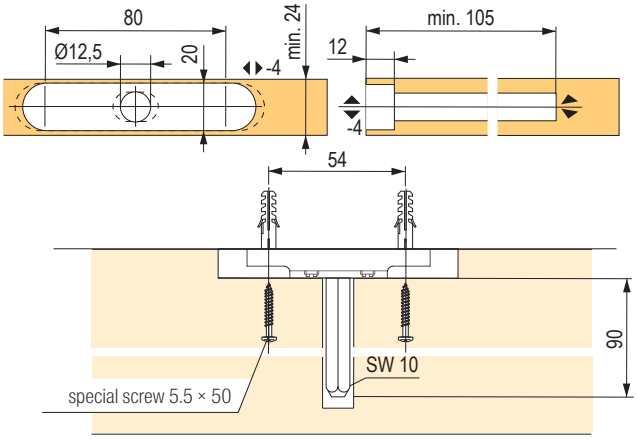

Shelf holders – Titan 3

code	Hettich code	description
106064	79714	20 pcs in package

- concealed mounting
- max. load including shelf 9 kg with using 2 holders
- bearing pin: ø 12 mm
- height adjustment: ± 2 mm
- min. shelf thickness: 19 mm
- shelf tilt adjustment
- galvanised steel

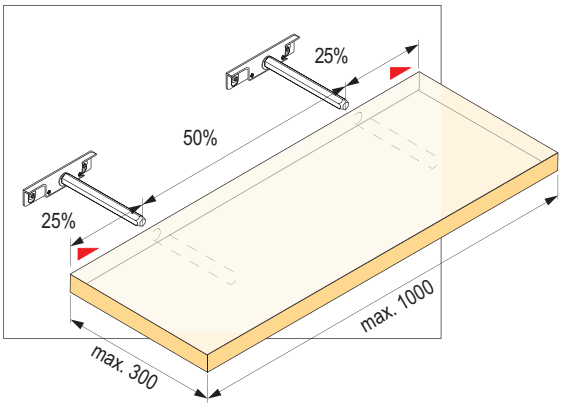

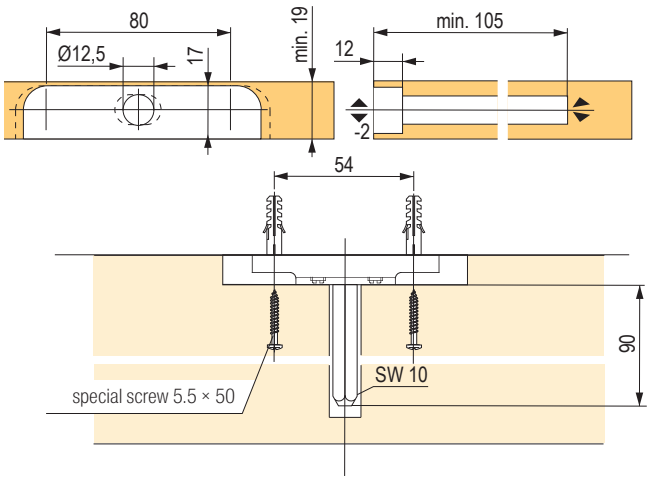

adjustable cabinet hangers

Overview

Adjustable cabinet hangers Italiana Ferramenta	APC 1	**p. 10.94**
	APC 6	**p. 10.94**
	Libra H1	**p. 10.95**
	Libra H2	**p. 10.96**
	Libra H7	**p. 10.97**
	Libra H11	**p. 10.99**
Adjustable cabinet hangers and wall bars Italiana Ferramenta	wall plates	**p. 10.100**
	other cabinet hangers	**p. 10.101, 10.104**
Other adjustable cabinet hangers	Scilm	**p. 10.102**
	Strong	**p. 10.102, 10.103**
	Blum	**p. 10.104**
	Hettich	**p. 10.107**
	wall plates	**p. 10.103**
	Bystrica and others	**p. 10.105**

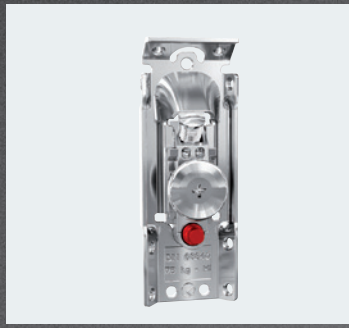

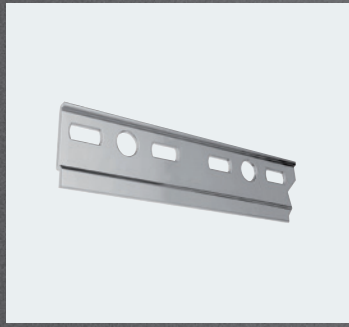

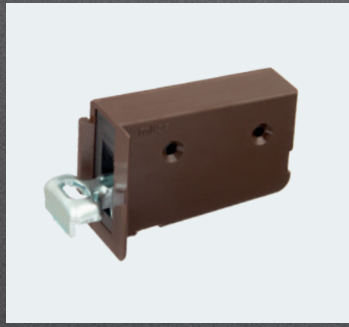

adjustable cabinet hangers for top cabinets

APC 1 cabinet hanger

code	description
396226	concealed adjustable cabinet hanger, set

- right-hand adjustable fitting, hidden behind the rear wall of the cabinet
- only the 20 mm diameter cover cap is visible from the front
- mounting by screw fixing into the wall and cabinet body
- height adjustment 18 mm; depth adjustment 31 mm; lateral adjustment approx. 45 mm (by sliding on the wall plate)
- load capacity 70 kg/pc, 140 kg/pair

Set contains:
- two pieces of fittings
- wall plates
- white plastic cover caps
- screws into the cabinet body (6 pcs)

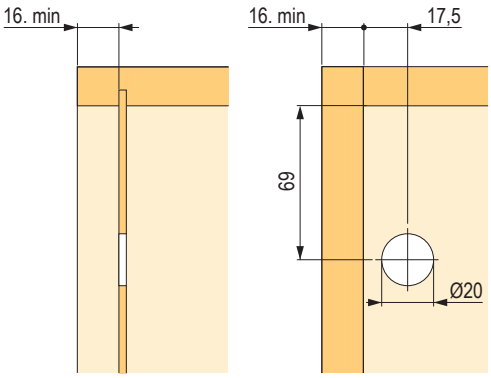

APC 6 cabinet hanger

code	description
396227	concealed adjustable cabinet hanger, set

- adjustable cabinet hanger for the right and left side, hidden behind the back panel of the cabinet
- only the 20 mm diameter cover cap is visible from the front
- assembly on pins in pre-drilled holes in the sides of the cabinet body with securing by screws in the sides or in the bottom of the cabinet body
- height adjustment 18 mm; depth adjustment 31 mm; lateral adjustment approx. 45 mm (by sliding on the wall plate)
- load capacity 65 kg/pc, 130 kg/pair

Set contains:
- one pair of hangers
- wall plates
- white plastic cover caps
- screws into the cabinet body (6 pcs)

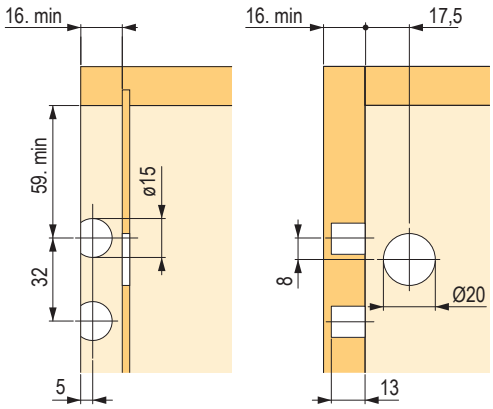

adjustable cabinet hangers for top cabinets

Libra H1 cabinet hangers with locking

code	description
361269	set for one cabinet (including template)

- right-hand adjustable cabinet hangers
- secured with eccentric clamp and screws
- locking bolt against unhinging of the cabinet from hanging profile in accordance with the standard EN14749
- load capacity 130 kg/pair
- height adjustment 13 mm; depth adjustment 12 mm; lateral adjustment approx. 30 mm (by sliding on the wall plate)
- for cabinet body depth up to 350 mm (top cabinets)
- for wall mounted installation, the 352537 wall bar can also be used

The set includes:
- pair of cabinet hangers and cover caps
- assembly template
- wall plate
- screws into the cabinet body

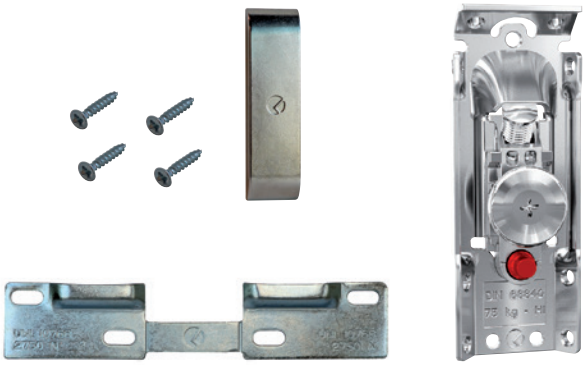

Installation of the cabinet hangers

drilling the holes for adjustment

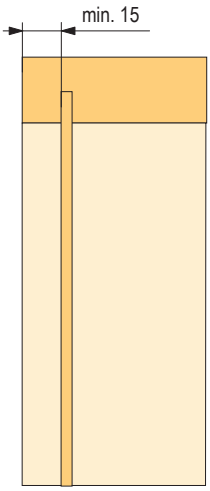

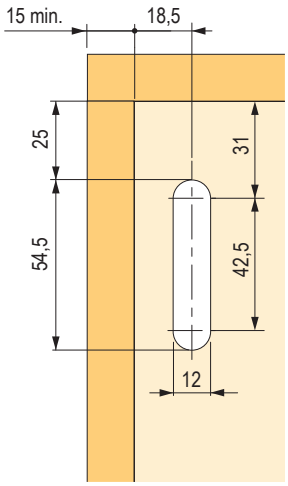

recommended fastening screws ø 3.5 × 20

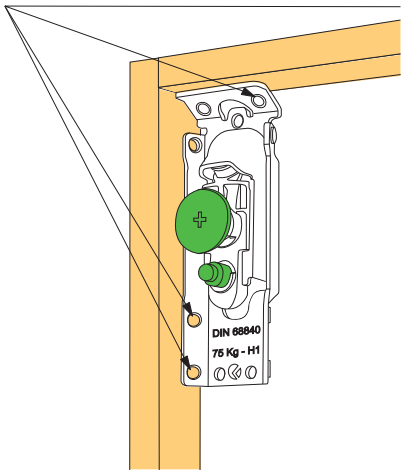

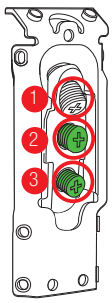

1 – height adjustment

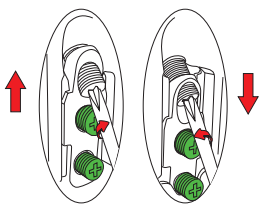

2 – adjustment of offset from the wall

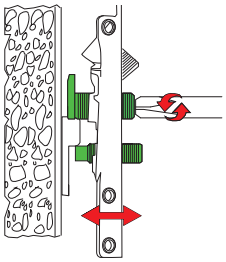

3 – safety latch against unhinging

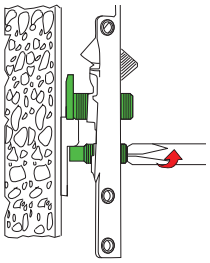

adjustable cabinet hangers for top cabinets

Libra H2 cabinet hangers with locking

code	description
134959	right-hand

- right-hand adjustable cabinet hangers
- secured with eccentric clamp and screws
- locking bolt against unhinging of the cabinet from hanging profile in accordance with the standard EN14749
- load capacity 150 kg/pair
- the back should be inserted 16 mm from the rear edge of the cabinet body
- height adjustment 13 mm, depth adjustment 12 mm
- for cabinet body depth up to 350 mm (top cabinets)

recommended wall bar 352537, or wall plates 134964 or 134965

Cover caps

code	type	colour
134963	wide	white
160564		grey
227087	narrow	nickel

- for drilling 30 mm

Drilling holes for adjustment

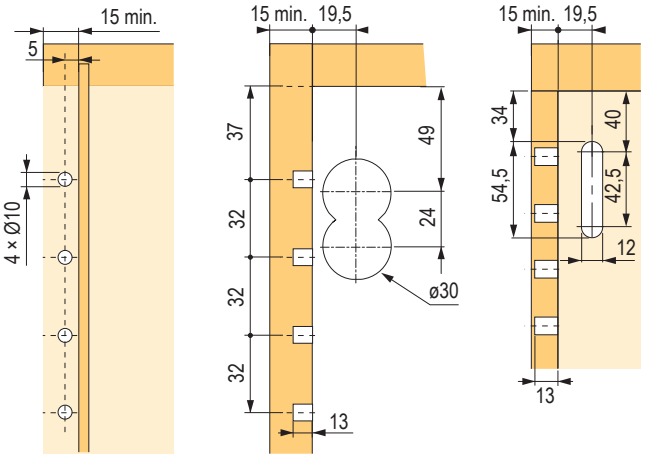

Installation of the cabinet hangers

recommended fastening screws ø 3.5 × 20

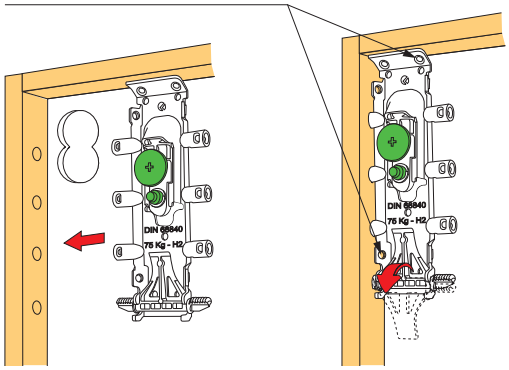

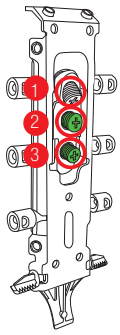

1 – height adjustment

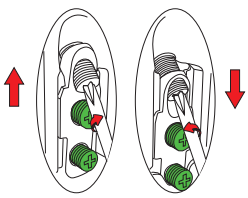

2 – adjustment of offset from the wall

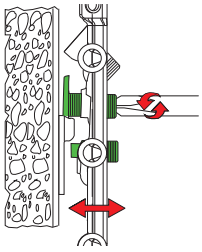

3 – safety latch against springing up

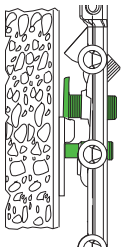

adjustable cabinet hangers for bottom cabinets

Libra H7 cabinet hanger with locking

code	description
231361	set of hangers for one cabinet
231362	aluminium profile, 2 m

Notes:
- locking bolt against unhinging of the cabinet in accordance with the standard EN14749
- load capacity up to 210 kg
- height adjustment 13 mm, depth adjustment 12 mm
- flat design of cabinet hanger (only 3.5 mm), possibility of using a deep drawer without limitations
- load capacity of the hangers affects the type of anchor and base material
- the set includes – a pair of cabinet hangers, wall plate WP5 and fixing fasteners
- connecting aluminium profile must be ordered separately

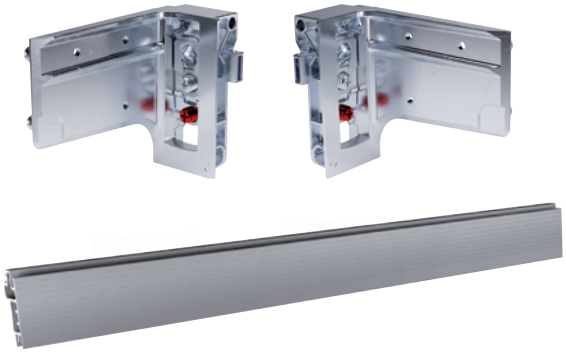

optimal number of fixing holes according to the recommendations and consideration of the installer

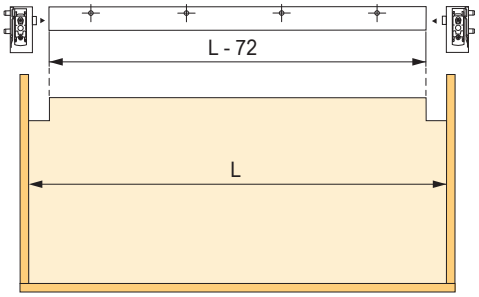

drilling with rear panel with thickness of 4 mm

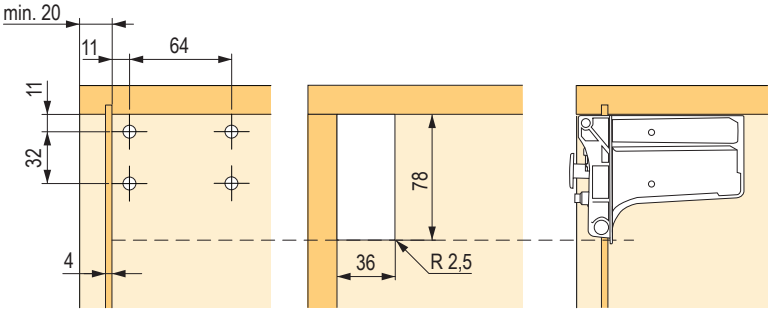

recommended number of holes

outer cabinet body width	number of holes
≤ 450	×
451–600	1
601–950	2
951–1200	3
≥1201	4

drilling plan with rear panel thickness 4 mm and aluminium profile

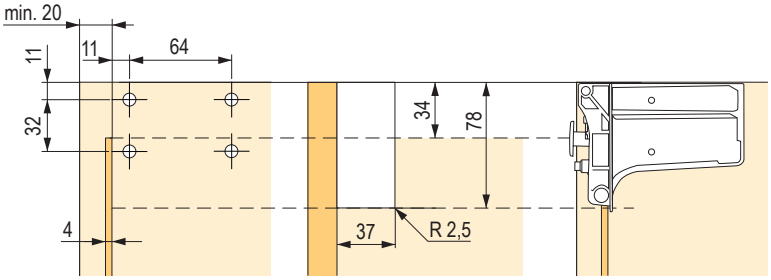

drilling without rear panel

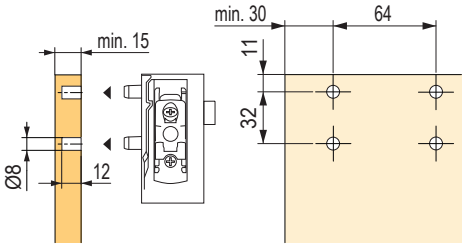

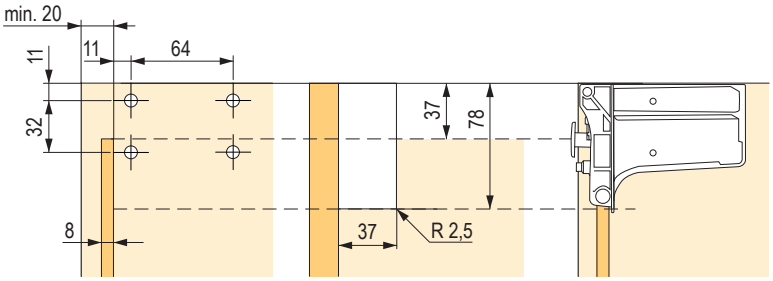

ITALIANA ferramenta

adjustable cabinet hangers for bottom cabinets

Load capacity depending on cabinet body dimensions

cabinet body type	without using a profile	with profile with two anchor holes
cabinet body without a drawer	120 kg	160 kg
cabinet body + drawer	80 + 30 kg	120 + 30 kg

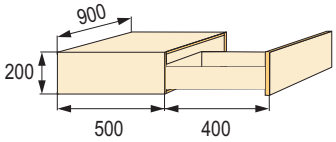

cabinet body type	without using a profile	with profile with two anchor holes
cabinet body without a drawer	150 kg	180 kg
cabinet body + drawer	110 + 30 kg	140 + 30 kg

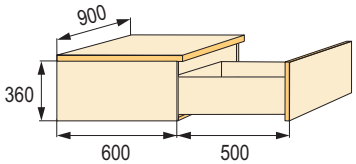

cabinet body type	without using a profile	with profile with two anchor holes
cabinet body without a drawer	170 kg	210 kg
cabinet body + drawer	100 + 60 kg	140 + 2× 30 kg

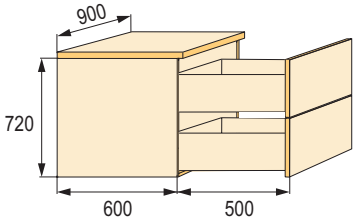

cabinet body type	without using a profile	with profile with two anchor holes
cabinet body without a drawer	170 kg	210 kg
cabinet body + drawer	130 + 30 kg	170 + 30 kg

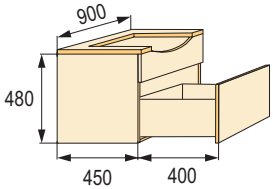

The reported data, empirically obtained, exclusively refer to the constructions and examples shown, correctly positioning and assembled by using wall plate.

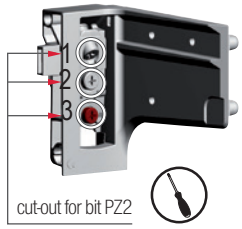

1
height adjustment:
13 mm

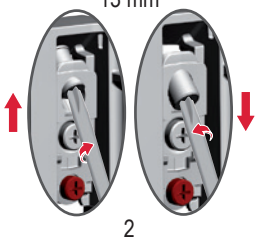

2
depth adjustment:
12 mm

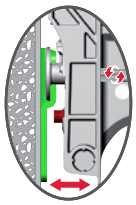

3
safety latch against unwanted unhinging

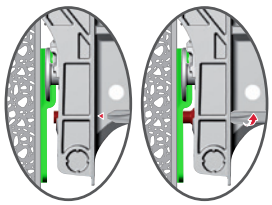

extra fixing holes
Pre-drilled holes facilitate drilling the wall. Their use reduces the stress put on the left- and right-sided hinges.

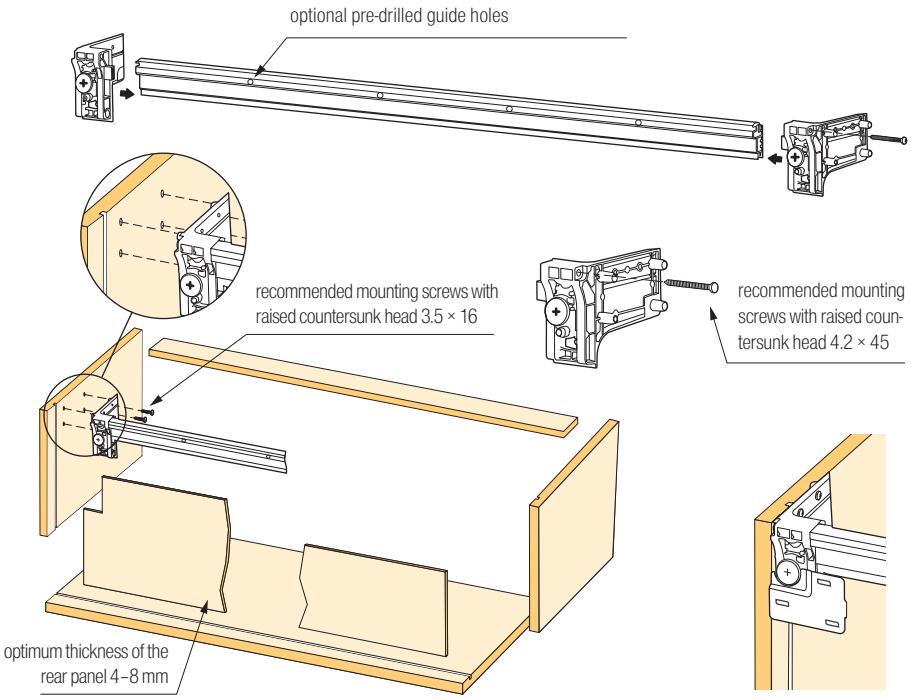

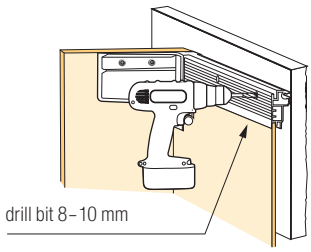

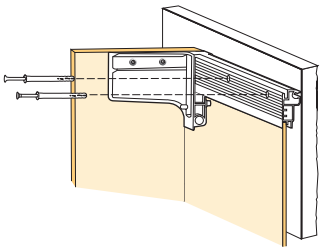

RESPONSIBILITY OF THE INSTALLER
- to find out whether the wall onto which the cabinet will be hinged is sufficiently strong and well adjusted
- to adapt mounting and suspension to the wall quality

adjustable cabinet hangers for bottom cabinets

Cabinet hangers for bottom cabinets Libra H11

code	description
474971	set for hanging one cabinet

Set contains:
- L+R cabinet hangers
- divisible counter plate WP13
- 8 pcs grub nut M6 × 10 × 10
- 8 pcs metric screw M6 × 12 with flat head PZ2
- 8 pcs euro screw 5.9 × 14 with flat head
- installation instructions

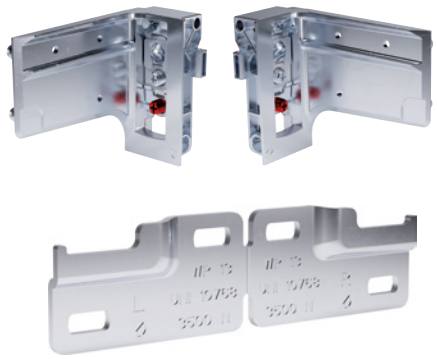

drilling plan without using the cover cap

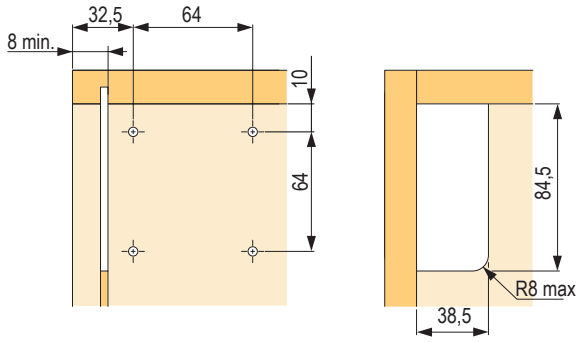

drilling plan using cover cap

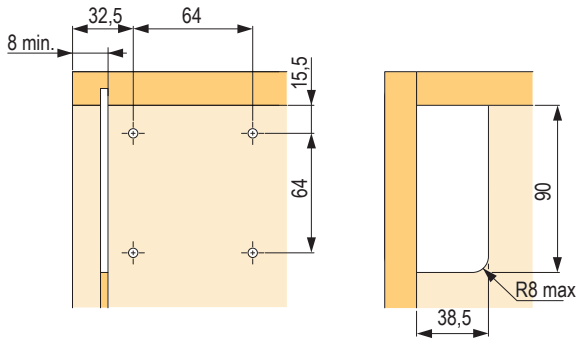

Cover caps

code	colour
507108	white
507109	anthracite
507110	light grey

- the set includes a pair of cover caps

Wall bar WPC1

code	description
507104	wall bar WPC1, length 2,000 mm

- stainless steel profile with a thickness of 1.8 mm
- suitable for APC fittings

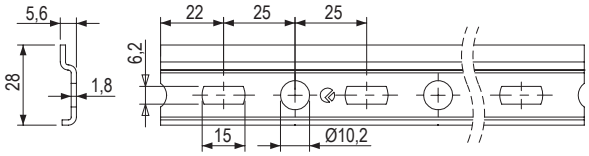

Wall plate

code	description
389592	width 60 mm

- anti-slip side backstops
- suitable for Libra fittings with securing against unhinging of the cabinet

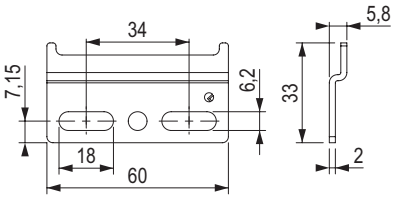

Wall bar B3

code	description
352537	wall bar B3, length 2,000 mm

- stainless steel profile with a thickness of 2 mm
- suitable for Libra fittings with securing against unhinging of the cabinet

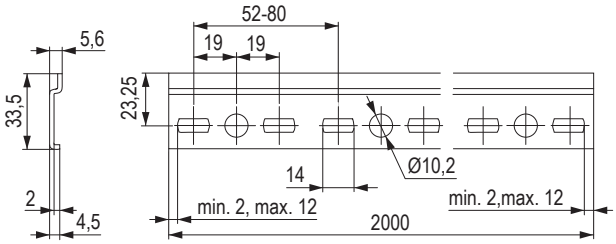

Wall plate

code	description
134966	wall plate R + L

- possibility of side adjustment (oval holes)
- the wall plate can be split in two pieces (L + R) and used for different cabinet widths or it can be used in one piece for cabinet width of 150 mm
- suitable for Libra fittings with securing against unhinging of the cabinet

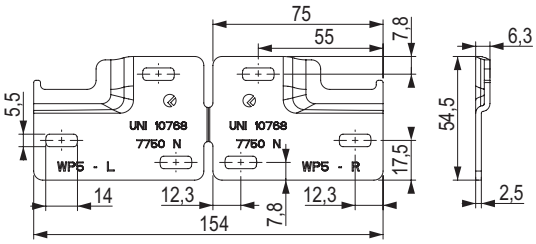

Wall plate

code	description
134964	wall plate R + L

- possibility of side adjustment (oval holes)
- the wall plate can be split in two pieces (L + R) and used for different cabinet widths or it can be used in one piece for cabinet width of 150 mm
- suitable for Libra fittings with securing against unhinging of the cabinet

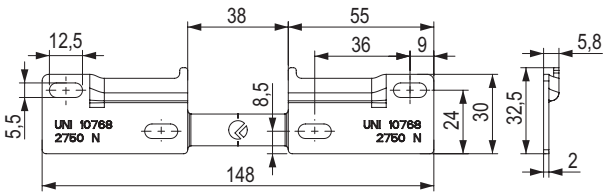

adjustable cabinet hangers

Cabinet hangers

282780

389426

code	description
282480	for suspension of panels with hook and wall plug
389426	for suspension of panels on bar

- for mirrors on LDF, view panels, fixed-back cabinets with min. thickness 15 mm
- adjustable in two directions: vertically by 11 mm, horizontally by 10 mm
- load capacity: panel, mirror up to 80 kg/pair, cabinet 50 kg/pair (tested on a cabinet body 600 × 600 × 250 mm)

Set contains:
- fittings
- wall plug
- hook

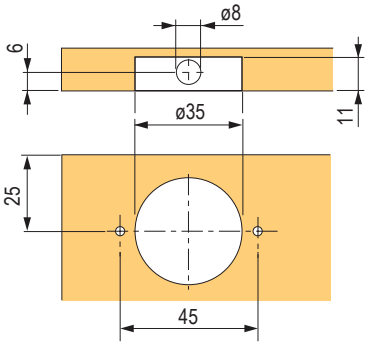

Adjustable cabinet hangers

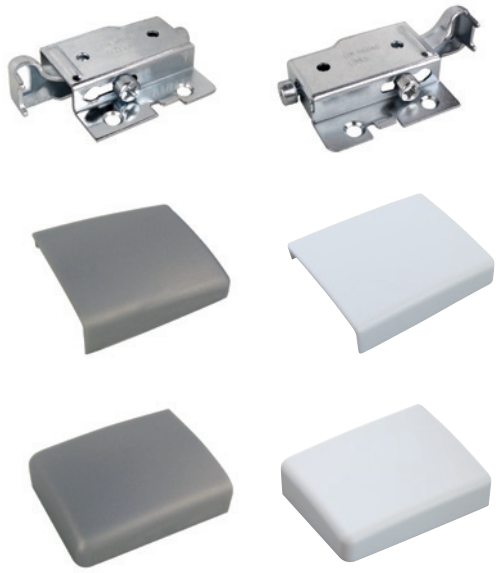

code	colour
474935	grey
479363	white

Set contains:
- pair of adjustable cabinet hangers
- pair of cover caps

- adjustment: height +/- 8.5 mm, depth +/- 6 mm
- load capacity: 150 kg/pair

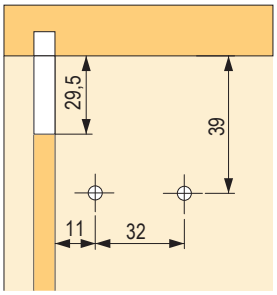

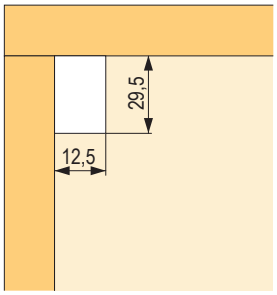

adjustable cabinet hangers

Scilm cabinet hanger

code	colour	design
82771	white	left
82774		right
82770	brown	left
82773		right
10909	beech	left
10910		right
224885	grey	left
224886		right

- load capacity 70 kg/pair
- height adjustment 10 mm, in-depth adjustment 20 mm

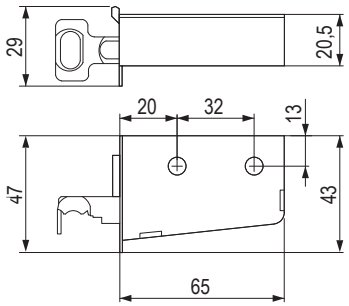

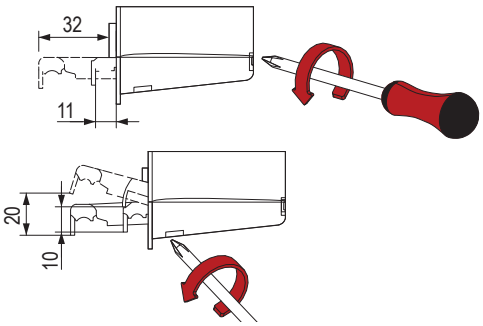

Strong cabinet hanger

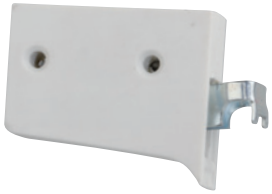

code	colour
82621	white

- load capacity 50 kg/pair
- height adjustment 9 mm, in-depth adjustment 12 mm

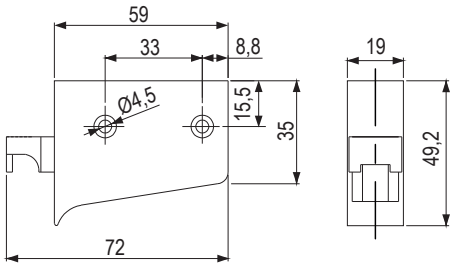

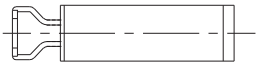

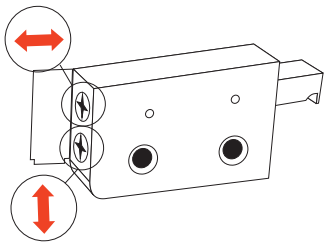

adjustable cabinet hangers

Cabinet hanger

code	colour
404459	white

- load capacity 150 kg/pair when using wall plugs
- recommended drilling of wall plugs Ø 9,5 mm
- load capacity 80 kg/pair when fastened with screws only
- height adjustment ± 8 mm, in-depth ± 10 mm

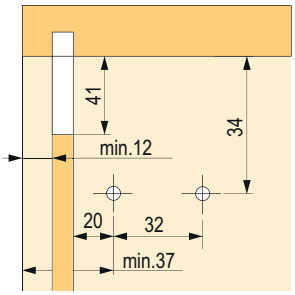

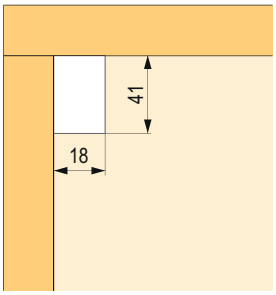

Fastening rail

code	description
82780	Scilm, length 2 m
82780R	Strong, length 2 m

- surface treatment: galvanised
- shortening is possible by simply breaking off

Striker plate for cabinet hanger

code	description
100236	screw mounting

- surface treatment: galvanised

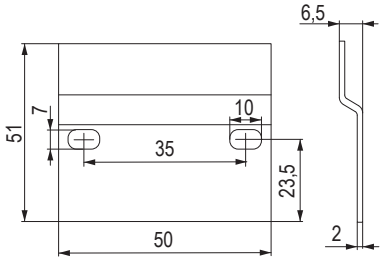

adjustable cabinet hangers

Blum cabinet hangers

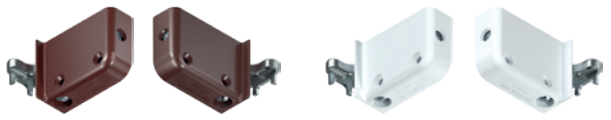

code	Blum code	description	colour
13746	48N0510.02S	right	white
13747	48N0510.03S	left	white
13740	48N0510.02S	right	brown
13741	48N0510.03S	left	brown

- cabinet hanger for mounting by screwing-on
- plastic housing with a hinge steel arm, galvanised
- colour: white, brown
- adjustable in three directions
- load capacity 130 kg per every pair in accordance with the DIN EN 15939 standard
- adjustment: down 7 mm, up 11 mm, backwards 3.5 mm, forwards 12.5 mm

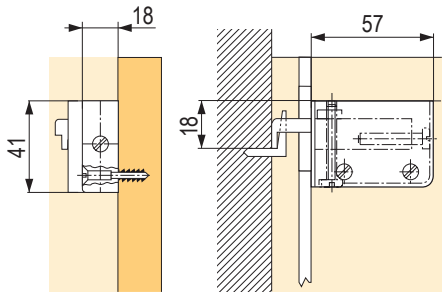

Planning
required space

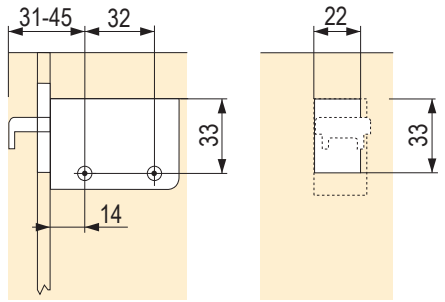

Fixing positions
in the cabinet body and in the cut-out in the rear side

Cabinet hanger concealed in the side panel

code	description
347152	concealed adjustable hangers for milling-in into side
347153	26 mm hook for hanging the ATC311 adjustable hanger

- adjustable fittings concealed in the side panel of the cabinet
- completely invisible inside the cabinet body
- mounting with screws to the side panel of the cabinet body, min. wall thickness 18 mm
- possibility of horizontal and vertical adjustment
- must be suspended on the counterpart (hook) 347153
- can be used both for suspension of top cabinets and for suspension of shelves with vertical side panels
- load capacity 80 kg per fitting (160 kg per pair)
- **access to the adjusting screws is possible from 3 sides (left, right and top)**

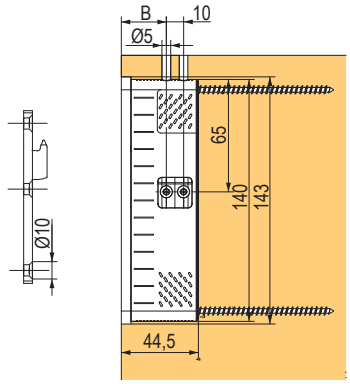

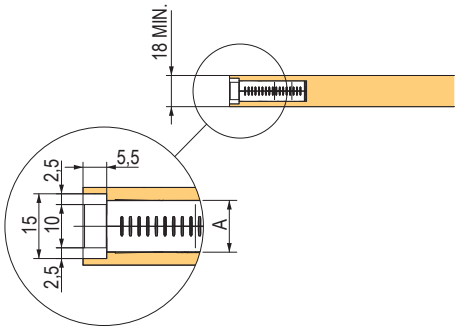

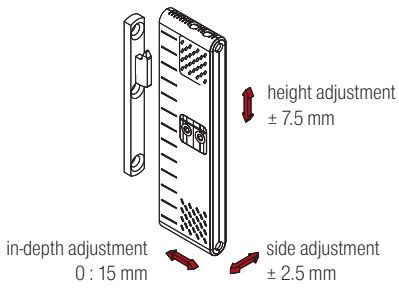

adjustable cabinet hangers

Bystrica cabinet hanger

code	colour
93240	white
93241	brown
134922	oak
93244	alder
93245	ash
472043	black
472044	light grey

- can be used for top and also side mounting

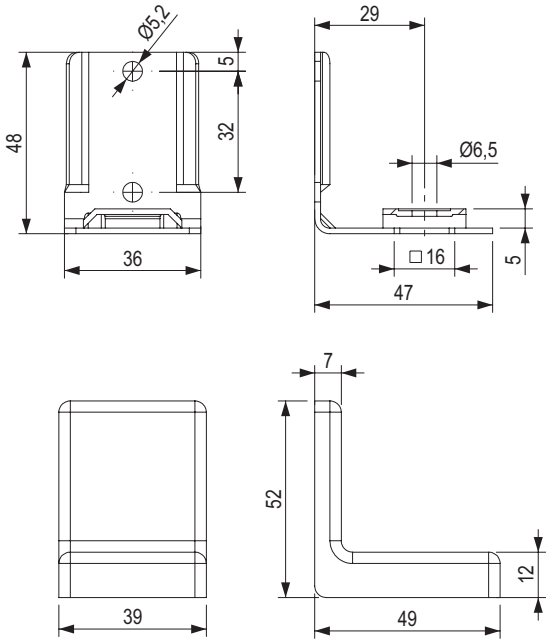

Side cabinet hanger

code	colour
100232	white
100233	brown

- screw and euro screw mounting
- with a screw and a wall plug

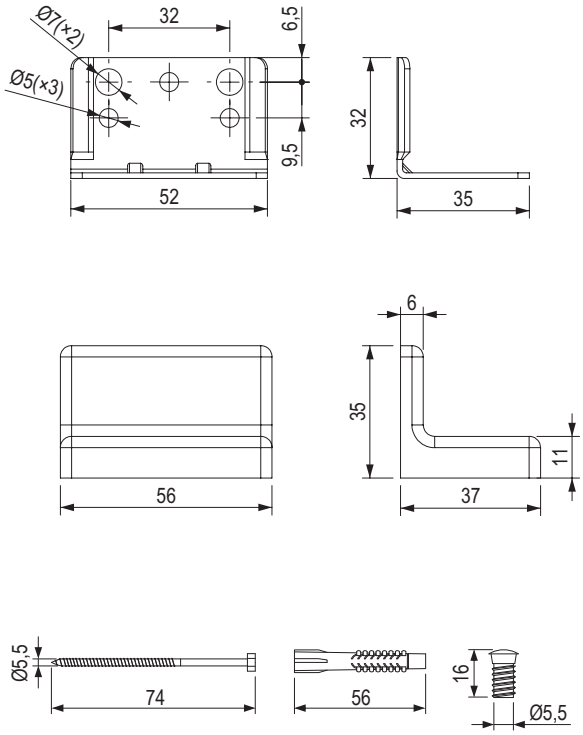

hook connectors

Make the joint invisible

- Option with/without side clearance.
- Simple connector – no special tools or skills required.
- Easy installation by simply snapping the components into place.
- Invisible joint – recessed and concealed.
- Can be used with standard screws.

UNO hook connector

code	description
463412	K120 UNO 30 stainless steel hook connector

DUO hook connector

461769

461770

code	description
461769	K070 DUO 30 ML hook connector with side clearance
461770	K074 DUO 30 OL hook connector without side clearance

Accessories

code	description
459416	K073 centre punch, steel + plastic UNO 30

code	description
507106	K121 securing clip for UNO/DUO 30

Accessories

YouTube

code	description
461771	K041 DUO 46/15 mm, connector for wooden profiles
461772	K036 DUO 62/15 mm, connector for wooden profiles
461773	K055 DUO 100/15 mm, connector for wooden profiles

code	description
507106	K121 securing clip for UNO/DUO 30

code	description
459413	K071 centre punch DUO 30
459414	K075 centre punch DUO 30

adjustable cabinet hangers for top cabinets

SAH 215/216 suspension fittings

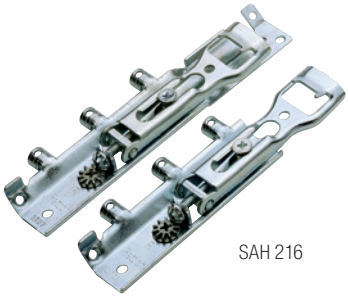

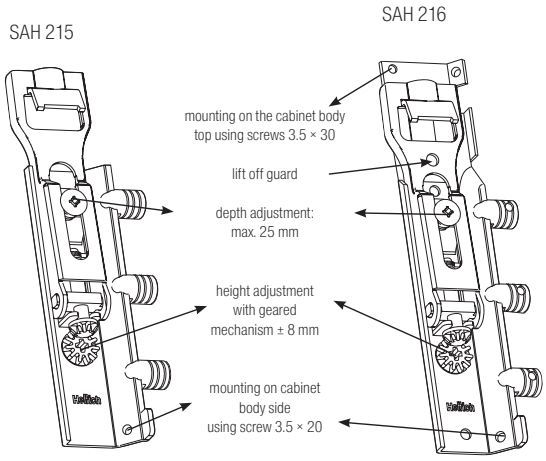

code	Hettich code	description
104691	79716	SAH 215, 25 pcs in package
104692	79717	SAH 216 (attaching to the bottom of the cabinet body), package: 25 pcs

- use behind cabinet back
- SAH 216 – also for fixing on top of the cabinet body
- for suspension on rails and hooks
- SAH 215 load capacity 45 kg; SAH 216 load capacity 55 kg
- suitable for use with rear back recess of 16 mm and over
- depth adjustment: max. 25 mm
- height adjustment: ± 8 mm
- moving the cabinet body to the side by ± 3 mm in case of suspension on hooks
- when suspended on hook, the cabinet body is lifted by 7.5 mm
- suspension on hooks: closed shape prevents the cabinet from slipping off
- can be used in combination with suspension rails, type B
- galvanised steel – fully recyclable
- optional "lift off guard" function by means of special screw

SAH 216 cabinet hangers

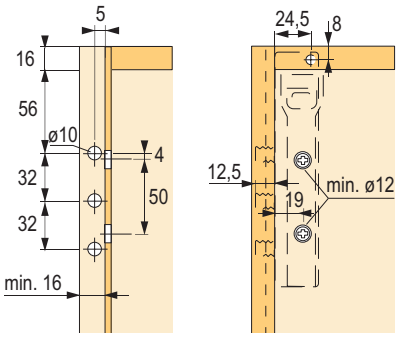

SAH 216

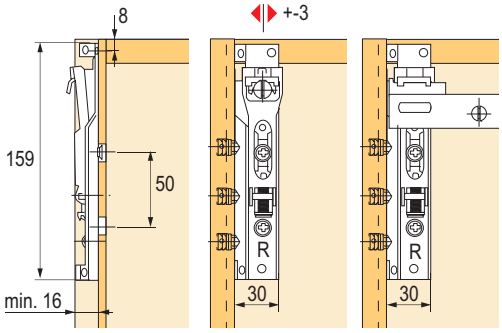

suspension on hooks suspension on rails

SAH 215 cabinet hangers

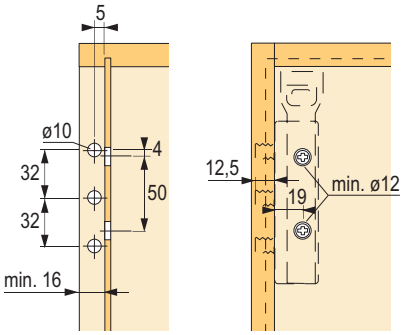

SAH 215

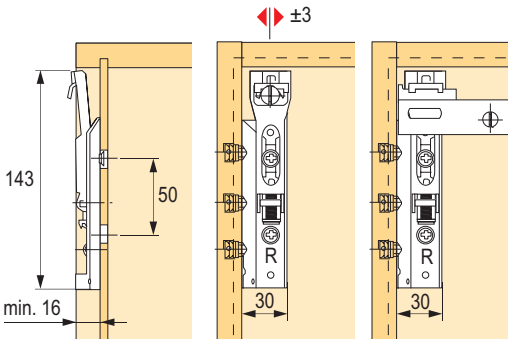

suspension on hooks suspension on rails

adjustable cabinet hangers for top cabinets

Suspension rail, type B

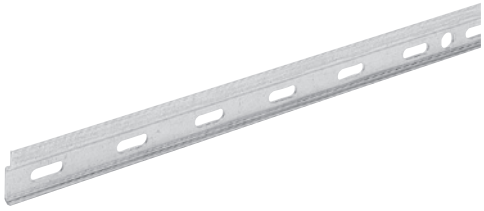

code	Hettich code	description
104708	9007651	10 pcs in package

- load capacity: 130 kg/cabinet
- fixing with 2 special screws Ø 5.5 × 50 mm at the location of each cabinet hanger; for cabinet body widths of 900 mm or more, an additional special screw Ø 5.5 × 50 must be used in the middle behind each cabinet body
- rail length 3,000 mm, with oval holes, hole span 50.8 mm
- galvanised steel

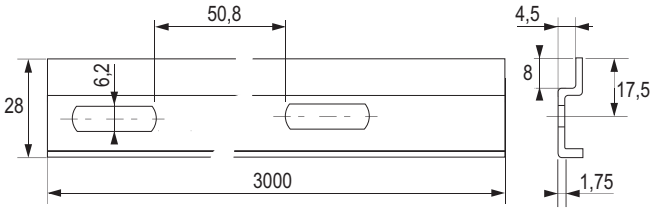

SAH 305 for rear assembly

code	Hettich code	description
103989	40669	100 pcs in package

- load capacity: 15 kg/pcs
- cabinet hangers are pressed into drilled holes with a diameter Ø 30 × 11.5 mm
- zinc casting without surface treatment
- minimum back thickness: 16 mm
- side adjustment: ± 8 mm

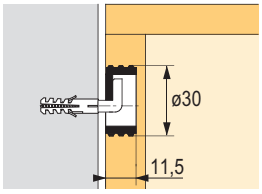

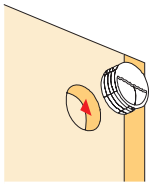

Special screw

code	Hettich code	description
106267	65480	5.5 × 50 mm + wall plug

Suspension hook

code	Hettich code	description
104630	46103	6 × 50 mm + wall plug

Endless possibilities for your kitchen

Bed connecting fittings

code	Hettich code	package
105284	25185	10 sets

- total height: 100 mm
- suspension part with 2 hooks
- especially suitable for narrow sideboards of the bed
- blue passivated steel
- 1 set includes:
  2× suspension part with hooks, right
  2× suspension part with hooks, left
  4× bearing part, left/right

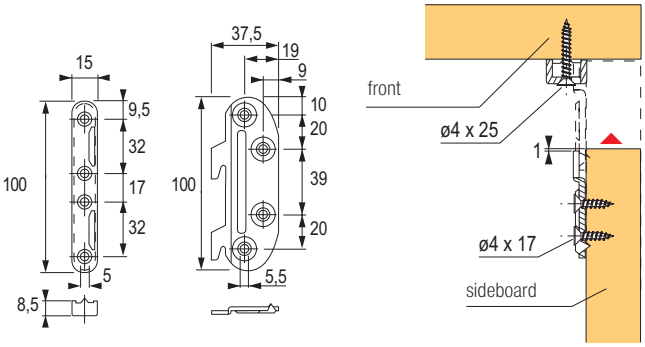

code	Hettich code	package
105286	25183	10 sets

- total height: 130 mm
- suspension part with 3 hooks
- stable and well-tried fitting for suspension mounting
- blue passivated steel
- 1 set includes:
  2× suspension part with hooks, right
  2× suspension part with hooks, left
  4× bearing part, left/right

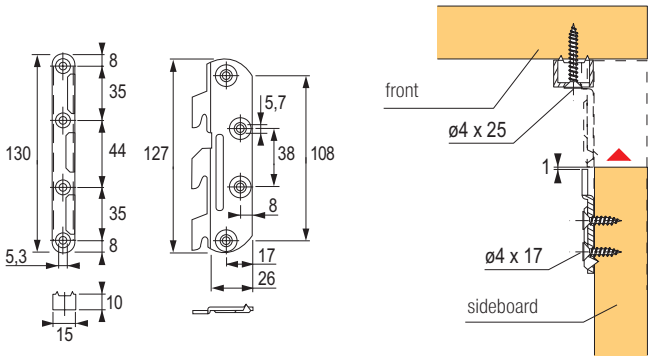

Bed connecting fitting 127 mm

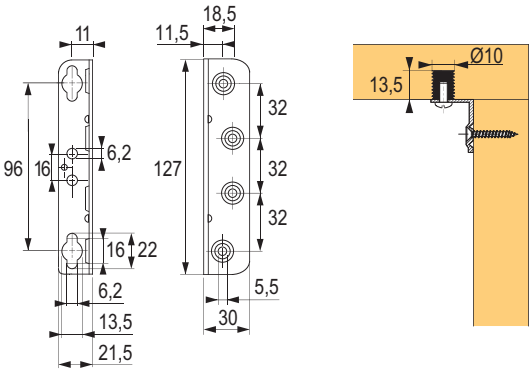

code	Hettich code
108008	25189

- the set includes: 1 angle bracket, 2 enclosures M6 × 13, 2 screws M6 × 12
- chrome plated steel

Angle bed connecting fitting 226 mm

code	Hettich code
108009	47635

- holes for screws, pitch: 32 mm
- suitable particularly for high sideboards
- the set includes: 1 angle bracket, 3 enclosures M6 × 13,3 screws M6 × 12
- chrome plated steel

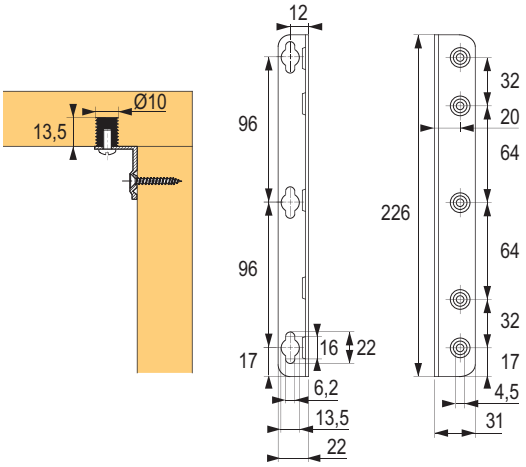

StabiloFix

code	Hettich code
108016	47634

- for dismountable upholstered beds or bedclothes drawers
- high strength, adjustable by up to 4 mm
- chrome plated steel

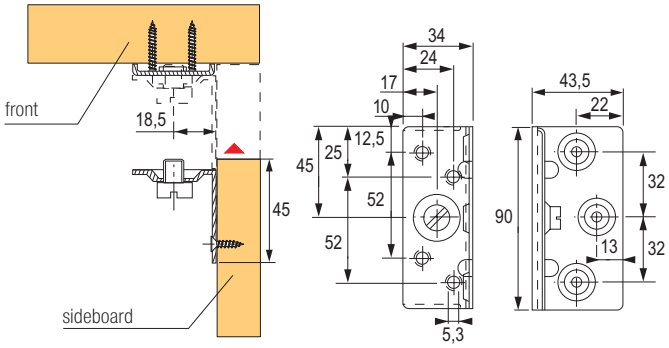

Varifix – height adjustable bed fitting

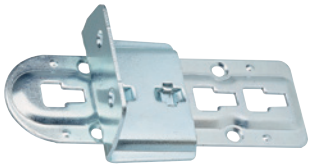

code	Hettich code
105292	47633

- positioning of slat bed bases or upholstery is adjustable to three heights with a pitch of 24 mm
- can be used for a double bed with a central line
- blue passivated steel

*overlay for a bracket profile with a thickness of 35 mm

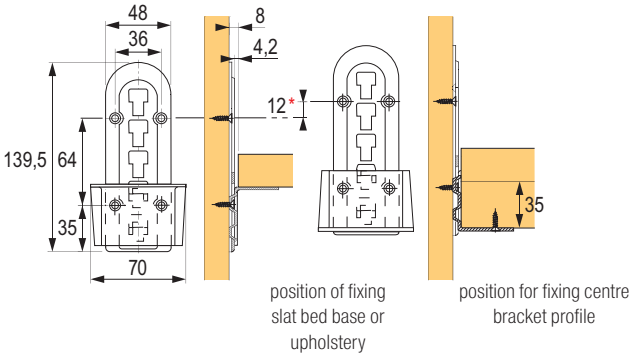

Supporting leg for centre bracket profile

code	Hettich code	dimension X (mm)	adjustment (mm)
105958	47632	190	-42 / +76

- ideal use in combination with Varifix bed fitting
- black plastic
- 20 pcs in package

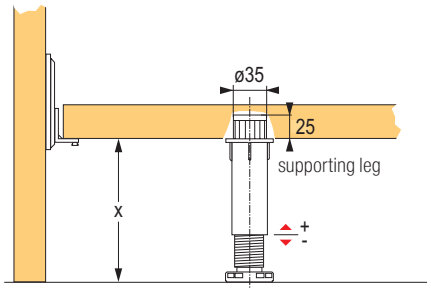

Centre bracket profile connector

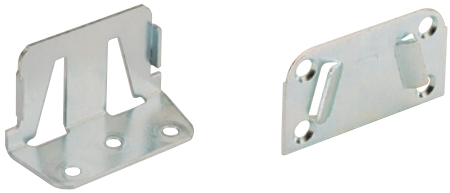

code	Hettich code
103927	25182

- for beds with wooden or metal structure
- can also be used for upholstered beds
- chrome plated steel

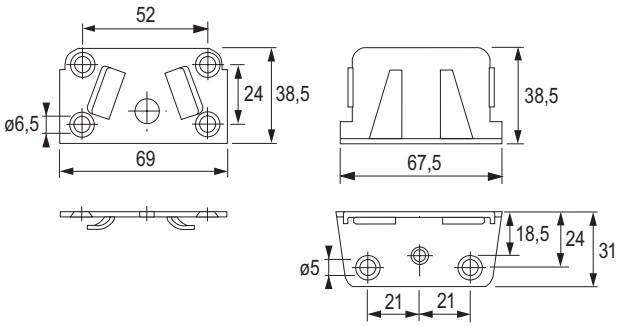

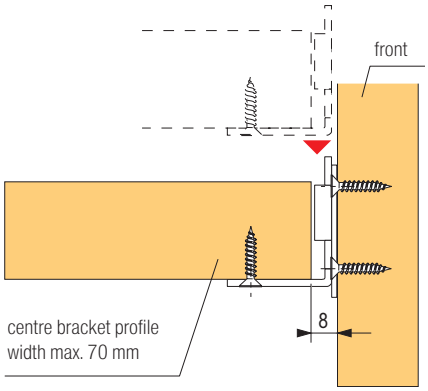

bed fittings

Rack bed fittings 130 mm

code	finish
11470	galvanised zinc

- set contains fittings for one bed

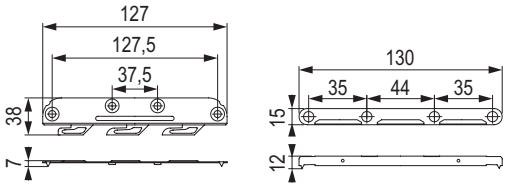

Bed positioning fitting for bed bases

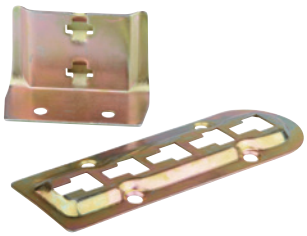

code	finish
134587	galvanised zinc

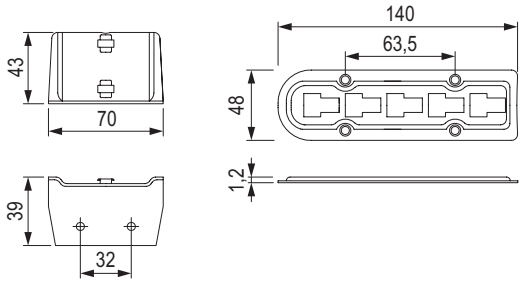

Bed connecting fittings 128

code	finish
501505	galvanised zinc

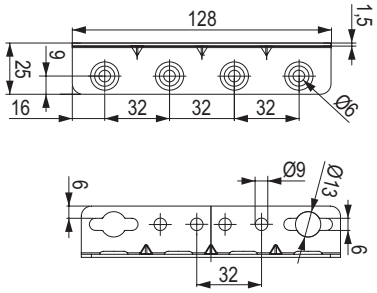

Central bed fittings

code	finish
11488	galvanised zinc

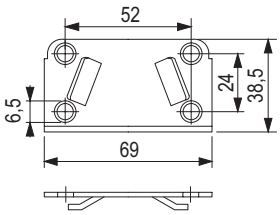

Adjustable leg of the bed centre bracket profile

code	height (mm)	adjustment (mm)
501503	148–250	+100

- load capacity: 300 kg, material: plastic

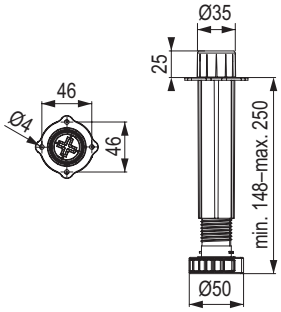

Flange for the support leg of the bed centre bracket profile

code	height (mm)
501504	26

- used to extend the support leg
- ø 25 mm

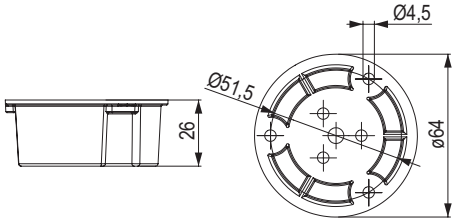

TV swivel – 80 kg

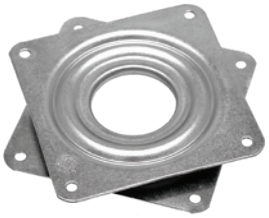

code	load capacity (kg)	height (mm)	dimensions (mm)
15660	80	8,5	81 × 81

- all-metal swivel
- rotation by 360°
- ball bearing
- use: TV tables, HI-FI tables

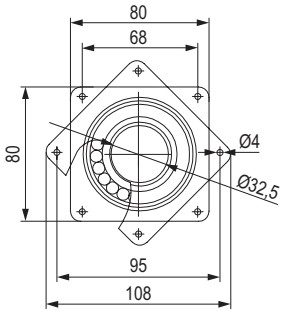

TV swivel – 150 kg

code	load capacity (kg)	height (mm)	dimensions (mm)
15661	150	11	155 × 155

- all-metal swivel
- rotation by 360°
- ball bearing
- use: TV tables, HI-FI tables

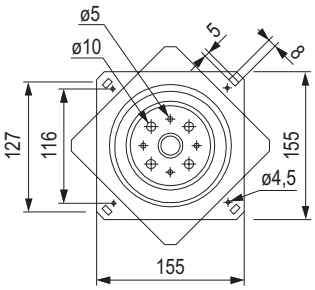

Strips for worktops

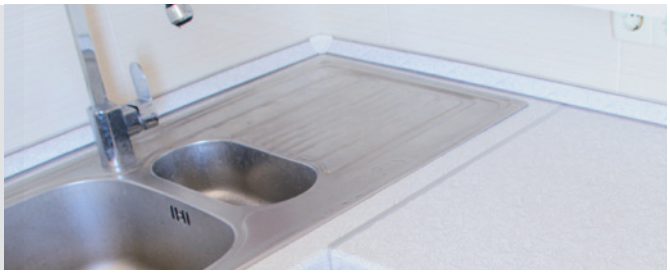

Strips for worktops 600 mm

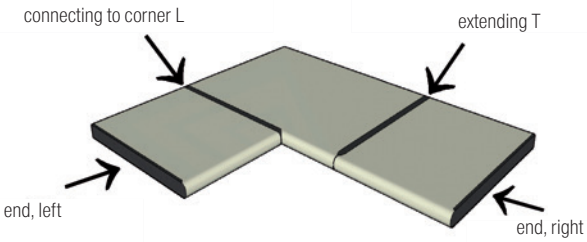

Corner connecting strip L/R, 38 mm

code	colour
313668	aluminium
313677	stainless steel
482528	black matt

End profile, 38 mm

code	description	colour
313669	left	aluminium
313678	left	stainless steel
482530	left	black matt
313670	right	aluminium
313679	right	stainless steel
482529	right	black matt

End profile, 38 mm, 0° radius

code	description	colour
349449	left	aluminium
349450	left	stainless steel
482534	left	black matt
349451	right	aluminium
349452	right	stainless steel
482533	right	black matt

Extending connecting strip L/R, 38 mm

code	colour
313671	aluminium
313680	stainless steel
482531	black matt

Corner connecting strip / extending L/R, 38 mm, 0° radius

code	colour
349448	aluminium
349447	stainless steel
482532	black matt

Strips for worktops 900 mm

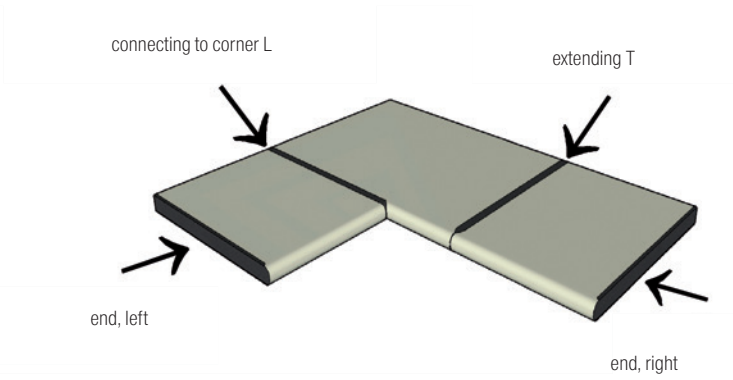

Corner connecting strip L/R, 38 mm

code	colour
482544	aluminium
482552	stainless steel
482535	black matt

End profile, 38 mm

code	description	colour
482546	left	aluminium
482554	left	stainless steel
482537	left	black matt
482545	right	aluminium
482553	right	stainless steel
482536	right	black matt

End profile, 38 mm, 0° radius

code	description	colour
482550	left	aluminium
482558	left	stainless steel
482542	left	black matt
482549	right	aluminium
482557	right	stainless steel
482540	right	black matt

Extending connecting strip L/R, 38 mm

code	colour
482547	aluminium
482555	stainless steel
482538	black matt

Corner connecting strip / extending L/R, 38 mm, 0° radius

code	colour
482548	aluminium
482556	stainless steel
482539	black matt

fittings for toilet cubicles

Fittings for toilet cubicles

Offered fittings are made of AISI 304 stainless steel and structural elements of aluminium anodised profiles.
This makes them suitable for places with increased humidity, chlorine or salt content.
Damp environment combined with compact laminate worktops is not a problem for these fittings and is therefore ideal for projects for example in swimming pools or changing rooms.
Individual components are ready for use with HPL compact laminate board of 12 mm with complete connecting fittings. Fittings for other board thicknesses are available on request.

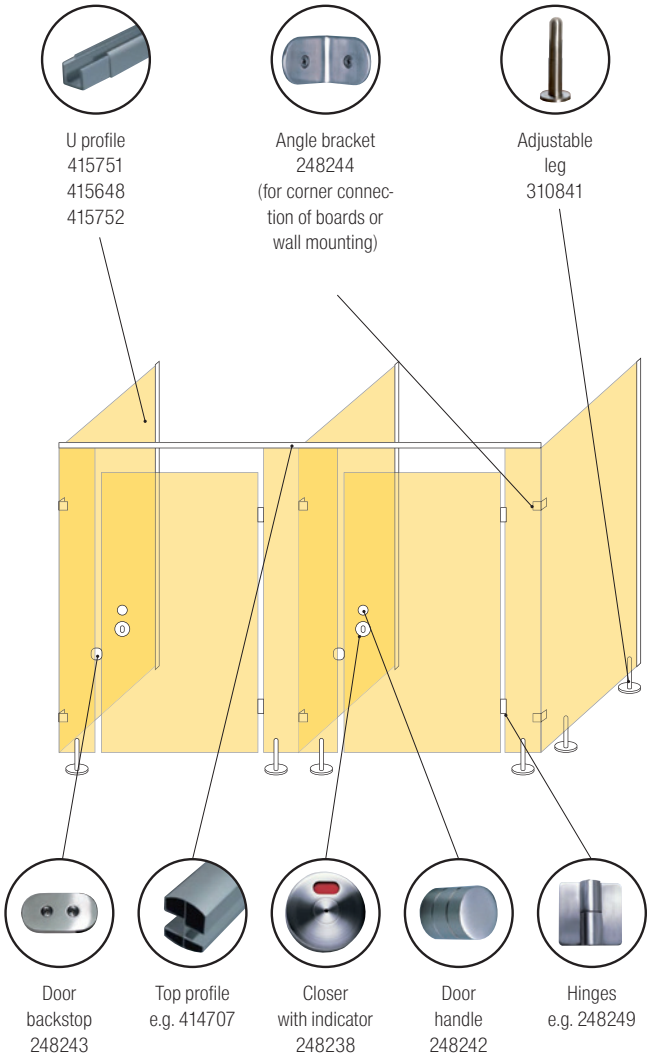

Example of a set:

The cubicle requires (depending on the type, number, ...):

- hinges (2–3 pcs for 1 door)
- set of closer and indicator
- door handle H38
- door backstop
- components for construction – choose from aluminium or stainless steel profiles depending on the type
- adjustable leg
- angle brackets

Overview of components

Straight hinges for screw fixing

code	description
248251	toilet hinge, left SH70 12 mm
248252	toilet hinge, right SH70 12 mm

Offset hinges for screw fixing

code	description
248253	toilet hinge, left, offset VSH70 for 12 mm
248254	toilet hinge, right, offset VSH70 for 12 mm

Hinges for assembly using screws

code	description
248249	toilet hinge, left H70 for 12 mm
248250	toilet hinge, right H70 for 12 mm
340564	toilet hinge, left H70 for 18 mm
340565	toilet hinge, right H70 for 18 mm

fittings for toilet cubicles

Overview of components

Closers with indicator

code	description
248238	closer with indicator, 12–18 mm, for classic hinge
248239	closer with indicator, 12 mm, for offset hinge

- simple closers with engaged/vacant indicator without key
- supplied with connecting fittings

Angle bracket

code	description
248244	for corner connection of boards, or for fixing boards to the wall

- connecting fittings not included

Backstop

code	description
248243	door backstop

- supplied with connecting fittings

Handle

code	description
248242	door handle H38

- handle (knob) is most often placed above the lock
- supplied with connecting fittings

Adjustable leg

code	description
310841	height: 150 mm, 12 mm
320753	height: 150 mm, 18 mm

- supplied with connecting fittings

fittings for toilet cubicles

Construction accessories

248259

248262

248261

248262

310516, 340563

248270

code	description
248259	toilet connecting pipe 32 mm, length: 3 m
248260	toilet pipe wall attachment
310516	toilet top fixing clamp, type T, for 12 mm[1]
340563	toilet top fixing clamp, type T, for 18 mm[1]
248261	toilet corner pipe connector 90°[2]
248262	toilet T pipe connector[3]
248270	toilet top fixing clamp 90°

[1] Delivered with connecting fittings for the installation of 12 mm or 18 mm boards. Used to extend the connecting pipe and to mount the board.
[2] Used for corner connection of pipes.
[3] Used to extend the connecting pipe and to connect the upright connecting pipe.

U profile

code	description
415751	toilet anodised aluminium U side profile 13 mm, length: 2 m
415648	toilet anodised aluminium U side profile 18 mm, length: 2 m
415752	toilet anodised aluminium U side profile 25 mm, length: 2 m

- U profile is mounted on the wall
- the board forming the cubicle wall is impacted on the profile
- the board must be secured to the profile with bolts or screws (not included)

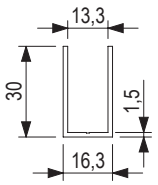

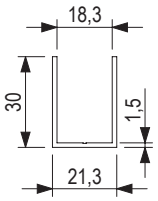

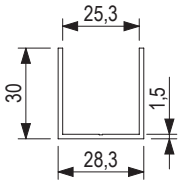

Top profile

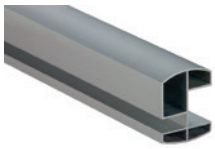

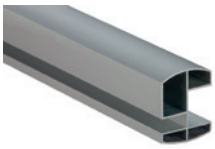

code	description
414707	toilet anodised aluminium top profile 13/18 mm, length: 3.2 m
414708	toilet anodised aluminium top profile 10/25 mm, length: 3.2 m

fittings for toilet cubicles